FOREWORD

This repair manual has been prepared to provide information on the repair methods (including cutting and welding operations, but excluding painting) for collision–damaged body components of the TOYOTA SUPRA.

Applicable models: JZA80 series

This manual consists of body repair methods, exploded diagrams and illustrations of the body components and other information relating to body panel replacement such as handling precautions, etc. However, it should be noted that the front fenders of the TOYOTA models are bolted on and require no welding.

Body construction will sometimes differ depending on specifications and country of destination. Therefore, please keep in mind that the information contained herein is based on vehicles for general destinations.

For the repair procedures and specifications other than collisiondamaged body components of the TOYOTA SUPRA refer to the following repair manuals.

Manual Name	Pub. No.
(USA and CANADA)	
• SUPRA Repair Manual	M/Y Version
• Supra Electrical Wiring Diagram Manual	M/Y Version
• 1/2 SUPRA New Car Features (Models except USA and CANADA)	NCF096U
• SUPRA Chassis and Body Repair Manual	RM344E
• Supra Electrical Wiring Diagram Manual	EWD175Y
• SUPRA New Car Features (All Countries)	NCF097E
• Fundamental Painting Procedures	BRM024E
• Fundamental Body Repair Procedures	BRM002E

If you require the above manuals, please contact your TOYOTA Dealer.

All information contained in this manual is the most up–to–date at the time of publication. However, specifications and procedures are subject to change without prior notice.

TOYOTA MOTOR CORPORATION

HOW TO USE THIS MANUAL

Each repair method description provided in Section RE of this manual comprises two pages, divided into 2 blocks (REMOVAL AND INSTALLATION) and includes illustrations to facilitate body repair.

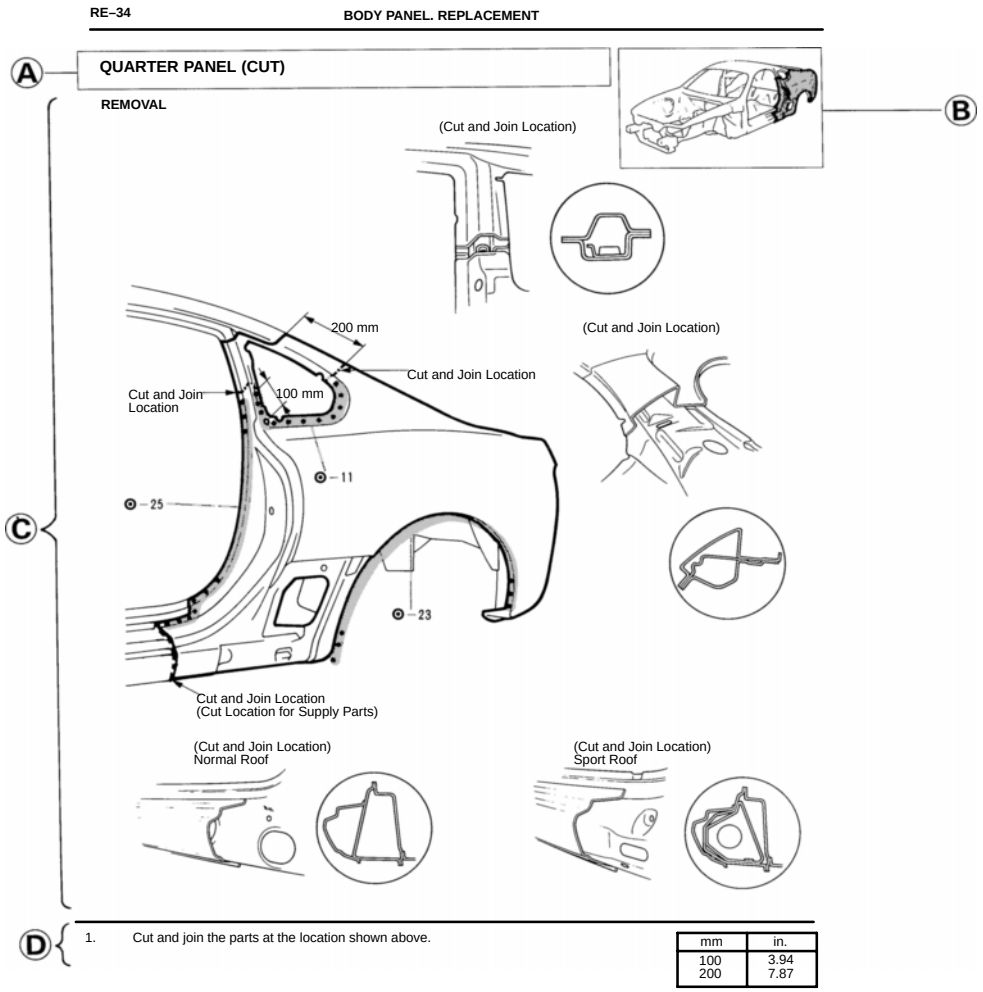

Ⓐ : REPLACEMENT PARTS AND METHOD

QUARTER PANEL (CUT)
- Replacement method
  - (ASSY) . . . . . Assembly replacement
  - (CUT) . . . . . Major cutting (less than 1/2 of parts used)
  - (CUT–H) . . . . Half cutting (about 1/2 of parts used)
  - (CUT–P) . . . . Partial cutting (most of parts used)
- Replacement parts

Ⓑ : PARTS LOCATION

Ⓒ : REMOVAL DIAGRAM
Describes in detail removal of the damaged parts involving repair by cutting.

Ⓓ : REMOVAL GUIDE
Provides additional information to more efficiently help you perform the removal.

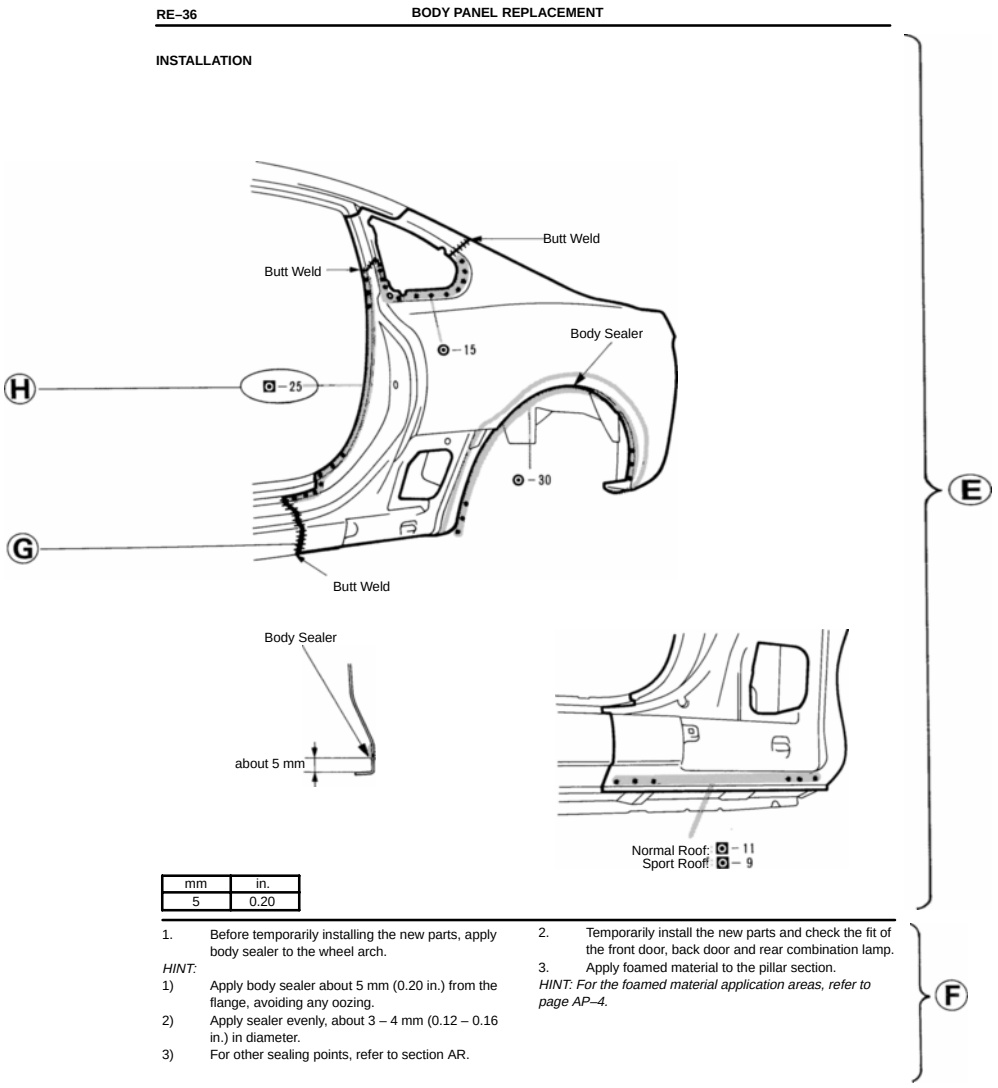

Ⓔ : **INSTALLATION DIAGRAM**
Describes in detail installation of the new parts involving repair by welding and/or cutting, but excluding painting.

Ⓕ : **INSTALLATION GUIDE**
Provides additional information to more efficiently help you perform the installation.

Ⓖ : **SYMBOLS**
See page IN–4.

Ⓗ : **ILLUSTRATION OF WELD POINTS**
Weld method and panel position symbols.
See page IN–5.

SYMBOLS

The following symbols are used in the welding Diagrams in Section RE of this manual to indicate cutting areas and the types of weld required.

SYMBOLS	MEANING	ILLUSTRATION
	SAW CUT OR ROUGH CUT	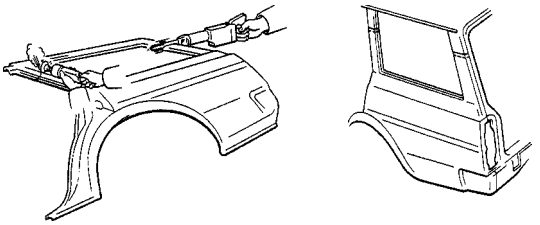
	REMOVE BRAZE	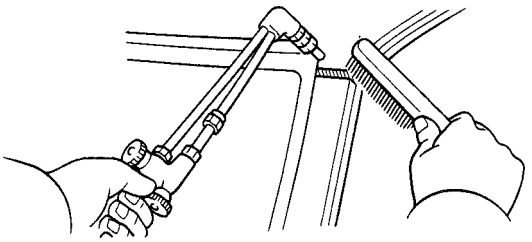
	WELD POINTS SPOT WELD OR MIG PLUG WELD (See page IN–5)	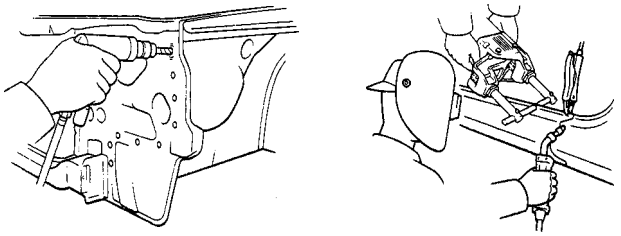
	CONTINUOUS MIG WELD (BUTT WELD OR TACK WELD)	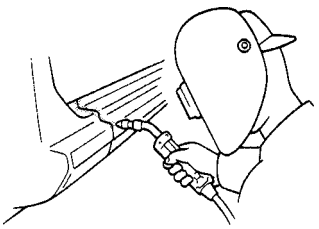
	BRAZE	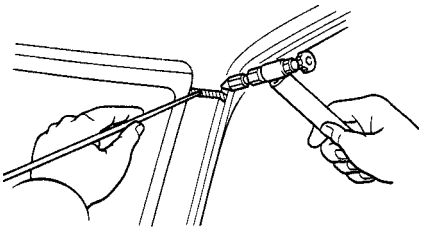
	BODY SEALER	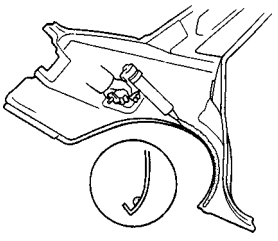

Illustration of Weld Point Symbols

EXAMPLE:

REMOVAL

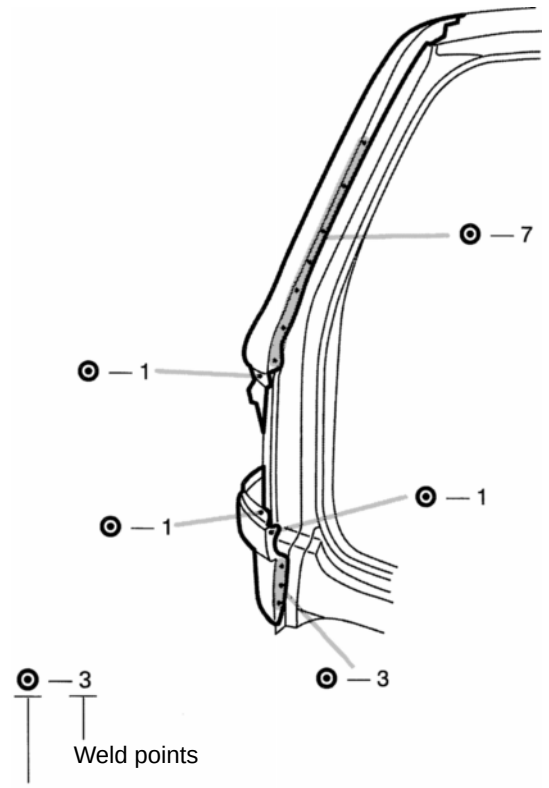

INSTALLATION

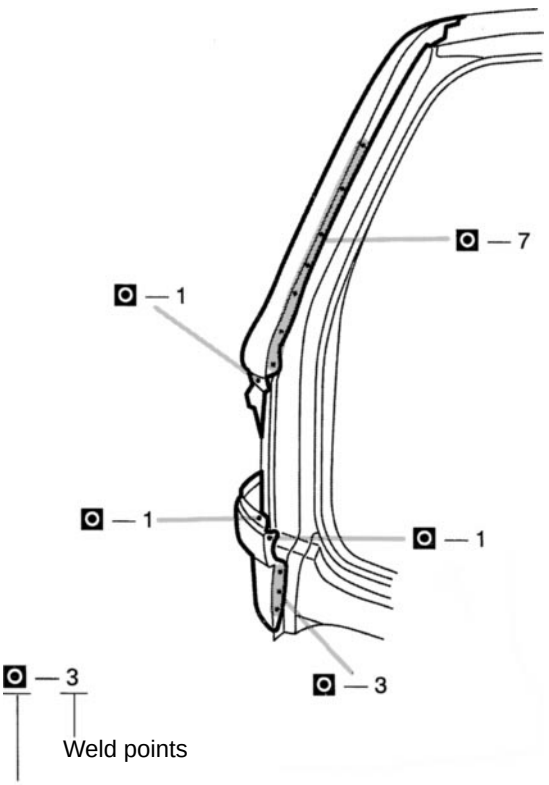

SYMBOL	MEANING	ILLUSTRATION
O M I	Remove Weld Points	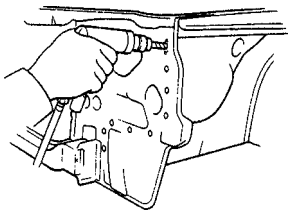
O	(Outside)	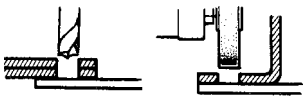
M	(Middle)	
I	(Inside)	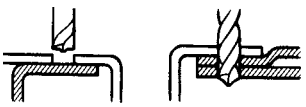
HINT: Panel position syrnbols are as seen from the working posture.		

SYMBOL	MEANING	ILLUSTRATION
O M I	Spot Weld	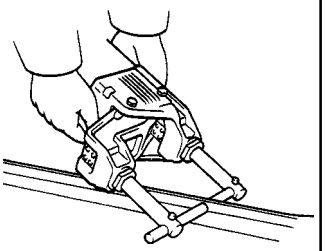
O M I	Mig Plug Weld	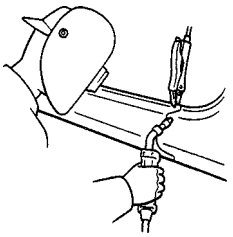
+	Spot MIG Weld	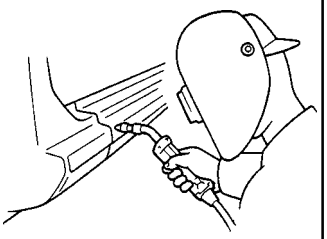

HANDLING PRECAUTIONS ON RELATED COMPONENTS

1. SUPPLEMENTAL RESTRAINT SYSTEM (SRS)

Locations of SRS Components

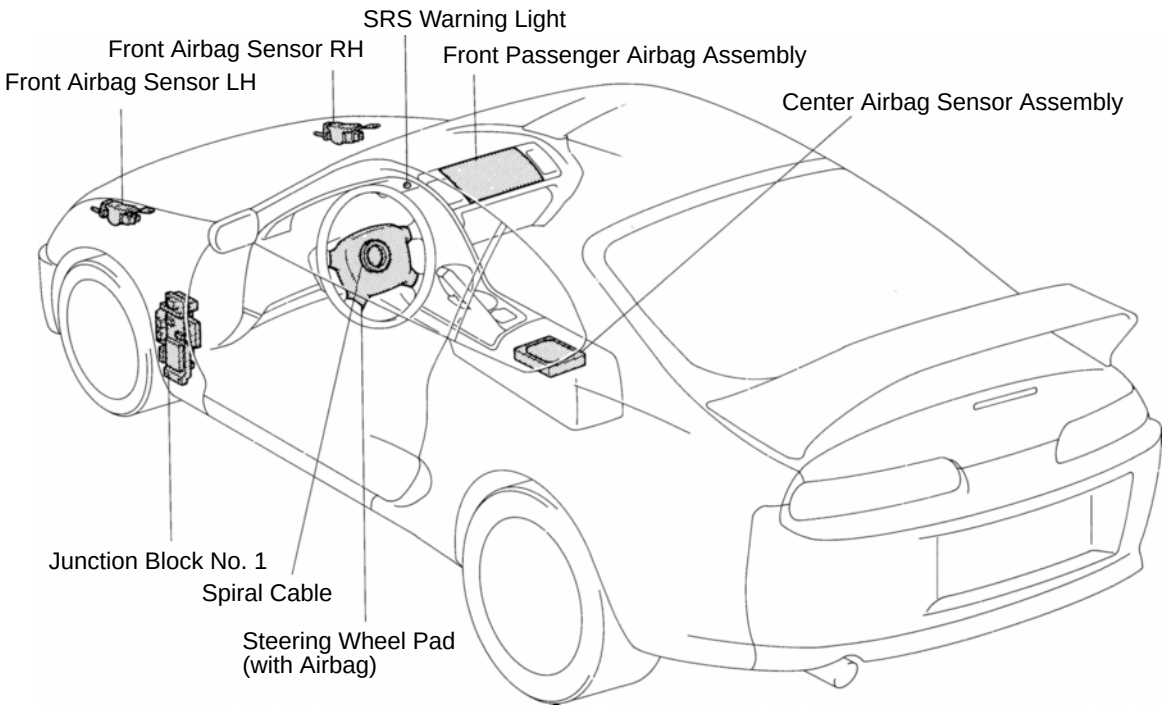

Servicing vehicle with a Supplemental Restraint System (referrerd to as the SRS in the remainder of this manual) installed.
When handling SRS components (removal, installation or inspection, etc.), always follow the directions given in the repair manual for the relevant model year to prevent the occurrence of accidents and airbag malfunction.
Also take the following precautions when repairing the body:

- Work must be started after 90 seconds or longer from the time the ignition switch is set to the LOCK position and the negative (–) terminal cable is disconnected from the battery.
  (The airbag system is equipped with a backup power source so that if work is started within 20 seconds of disconnecting the negative (–) terminal cable of the battery, the airbag may be deployed.)
  When the negative (–) terminal cable is disconnected from the battery, memory of the clock and audio systems will be cancelled. So before starting work, make a record of the contents memorized by each memory system. Then when work is finished, reset the clock and audio systems as before.
  When the vehicle has tilt and telescopic steering, power seat, outside rear view mirror and power shoulder belt anchorage, which are all equipped with memory function, it is not possible to make a record of the memory contents. So when the operation is finished, it will be necessary to explain this fact to the customer, and request the customer to adjust the features and reset the memory.
- When using electric welding, first disconnect the SRS connector (yellow color and 2 pins) under the steering column near the combination switch connector on the glove compartment finish plate and lower the front scuff plate before starting work.

- Before repairing the body, remove the SRS parts if, during repair, shocks are likely to be applied to the sensors due to vibrations of the body or direct tapping with tools or other parts.
- Do not expose the SRS parts directly to hot air or flames.
  NOTICE:
  1) *The maximum ambient temperature tolerance is 120˚C (248˚F) for the front airbag sensor, 105˚C (221˚F) for the center airbag sensor assembly and 93˚C (200˚F) for the steering wheel pad, and front passenger airbag assembly. If it is possible that the ambient temperature may reach or exceed the temperature limit, remove the sensors and the steering wheel pad from the vihicle or protect them with a hot insulation material before starting work.*
  2) *Prior to welding, remove adjacent SRS parts from the vehicle or protect there with fire–proof covers.*
- If the front fender or periphery of the vehicle is damaged, visually inspect for damage to the front airbag sensor using the inspection procedures described in section RS of the repair manual for the relevant model year.
  Also check that the dimensions of the body where the front airbag sensor is installed match those in the body dimension drawings.
  (The airbag may malfunction, or may not work, if the mounting angle or dimensions of the sensor mount are not correct.)

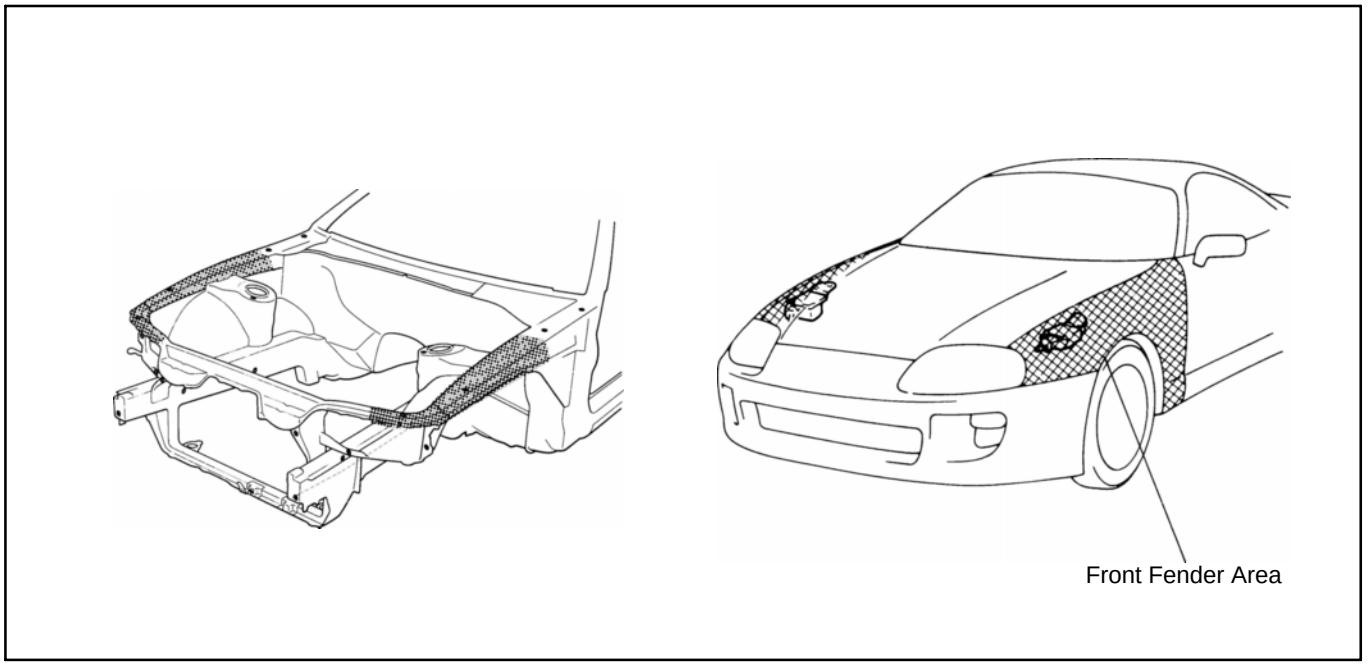

- If the vehicle is damaged, visually inspect for damage to the steering wheel pad using the inspection procedures described in section RS of the repair manual for the relevant model year.
- When removing or handling the steering wheel pad, and front passenger airbag assembly keep the pad upper surface facing upward. Also, lock the lock lever of the twin lock type connector at the rear of the pad and take care not to damage the connector.
  (Storing the pad or front passenger airbag assembly with its metalic surface up may lead to a serious accident if the airbag inflates for some reason.)
- Store the steering wheel pad and the front passenger airbag assembly where the ambient temperature remains below 93˚C (200˚F), without high humidity and away from electrical noise.
- Be careful not to let painting materials contact the SRS parts.
- Information labels are attached to the periphery of the SRS components. Follow the NOTICES.
- Store the airbag assembly where the ambient temperature remains below 93˚C (200˚F), without high humidity and away from electrical noise.

2. BRAKE SYSTEM

The brake system is one of the most important safety components. Always follow the directions and notes given in section BR of the repair manual for the relevant model year when handling brake system parts.
NOTICE: When repairing the brake master cylinder or TRAC system, bleed the air out of the TRAC system.

3. DRIVE TRAIN AND CHASSIS

The drive train and chassis are components–that can have great effects on the running performance and vibration resistance of the vehicle. After installing components in the sections listed in the table below, perform alignments to ensure correct mounting angles and dimensions. Particularly accurate repair of the body must also be done to ensure correct alignment.
HINT: Correct procedures and special tools are required for alignment. Always follow the directions given in the repair manual for the relevant model year during alignment and section DI of this manual.

Component to be aligned	Section of repair manual for relevant model year
Front Wheels	Suspension and Axle (SA) section
Rear Wheels	Suspension and Axle (SA) section
Propeller Shaft	Propeller Shaft (PR) section

4. ECU (ELECTRONIC CONTROL UNIT)

Locations of ECUs

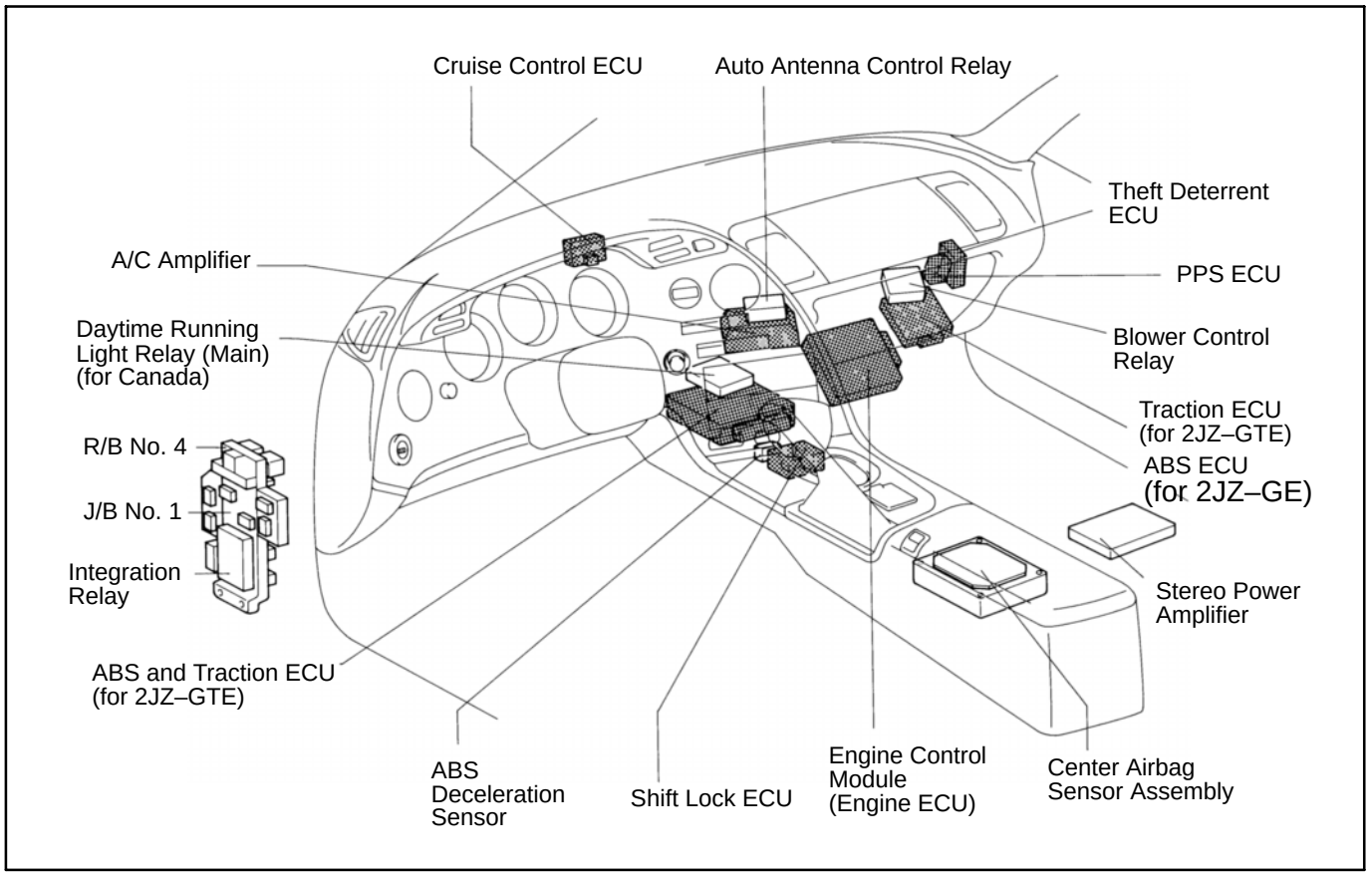

Locations of ECUs (Cont'd)

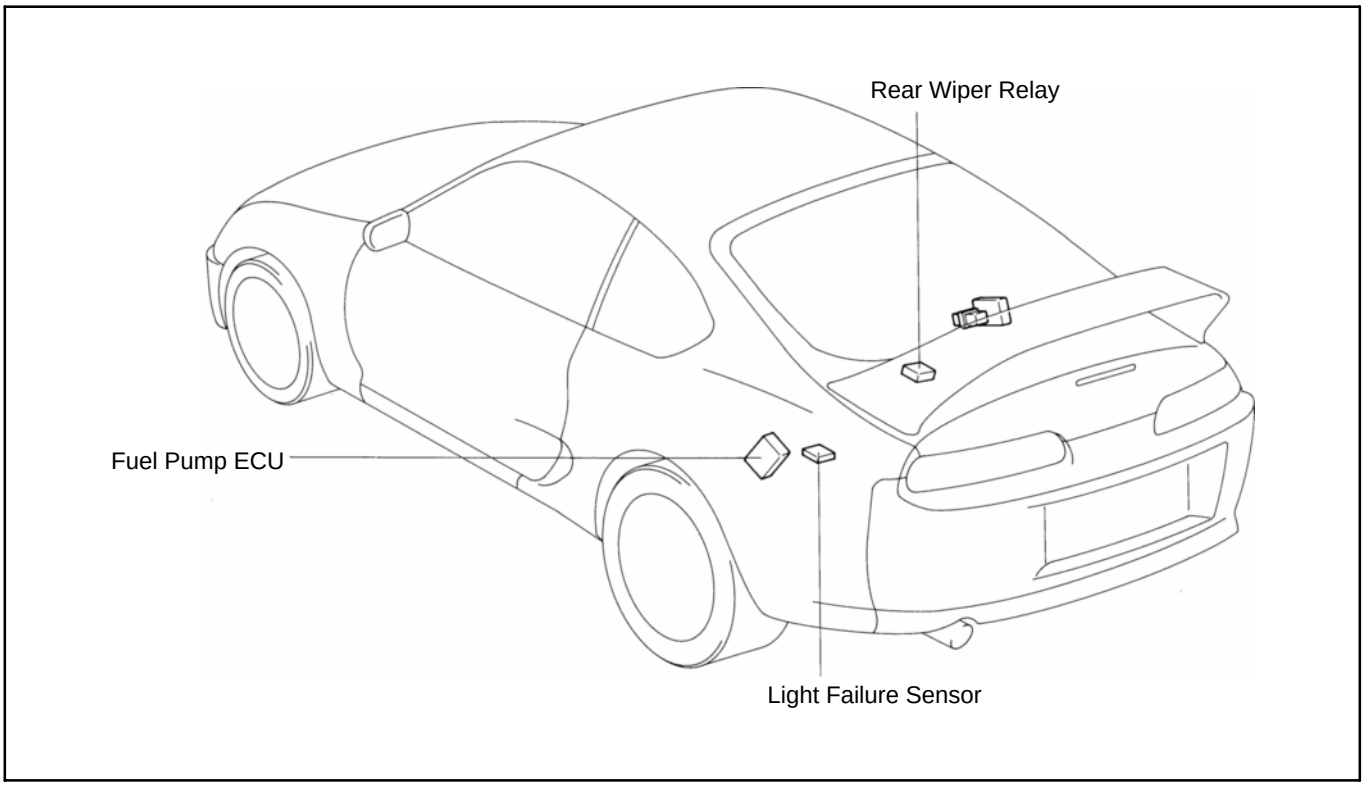

Many ECUs are mounted in this vehicle.
Take the following precautions during body repair to prevent damage to the ECUs.

- Before starting electric welding operations, disconnect the negative (–) terminal cable from the battery. When the negative (–) terminal cable is disconnected from the battery, memory of the clock and audio systems will be cancelled. So before starting work, make a record of the contents memorized by each memory system. Then when work is finished, reset the clock and audio systems as before.
  When the vehicle has tilt and telescopic steering, power seat and outside rear view mirror, which are all equipped with memory function, it is not possible to make a record of the memory contents.
  So when the operation is finished, it will be necessary to explain this fact to the customer, and request the customer to adjust the features and reset the memory.
- Do not expose the ECUs to ambient temperatures above 80˚C (176˚F).
  NOTICE: if it is possible the ambient temperature may reach 80˚C (176˚F) or more, remove the ECUs from the vehicle before starting work.
- Be careful not to drop the ECUs and not to apply physical shocks to them.

5. COMPONENTS ADJACENT TO THE BODY PANELS

Various types of component parts are mounted directly on or adjacently to the body panels.
Strictly observe the following precautions to prevent damaging these components and the body panels during handling.

- Before repairing the body panels, remove their components or apply protective covers over the components.
- Before prying components off using screwdriver or a scraper, etc., attach protective tape to the tool tip or blade to prevent damaging the components an the body paint.
- Before removing components from the outer surface of the body, attach protective tape to the body to ensure no damage to painted areas.
  HINT: Apply touch–up paint to any damaged paint surfaces.
- Before drilling or cutting sections, make sure that there are no wires, etc. on the reverse side.

GENERAL REPAIR INSTRUCTIONS

Work Precautions

SAFETY
Never stand in direct line with the chain when using a puller on the body or frame, and be sure to attach a safety cable.

VEHICLE PROTECTION
When welding, protect the painted surfaces, windows, seats an carpet with heat–resistant, fire–proof covers.

SAFETY
1. Before performing repair work, check for fuel leaks. If a leak is found, be sure to close the opening totally.
2. If it is necessary to use a frame in the area of the–fuel tank, first remove the tank and plug the fuel line.



WRONG

WRONG

SAFETY WORK CLOTHES
In addition to the usual mechanic's wear, cap and safety shoes, the appropriate gloves, head protector, glasses, ear plugs, face protector, dust–prevention mask, etc. should be worn as the situation demands.

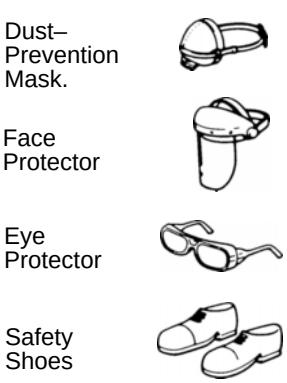

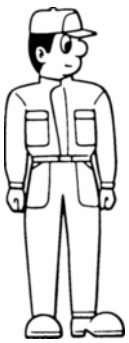

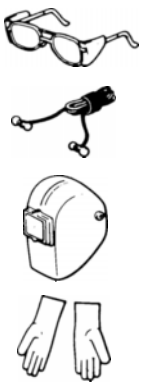

HAND TOOLS
keeping your hand tools in neat order improve your work efficiency.

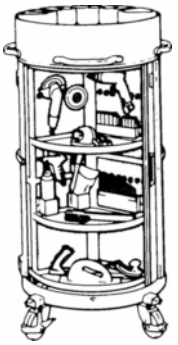

Proper and Efficient Work Procedures

REMOVAL

PRE–REMOVAL MEASURING
Before removal or cutting operations, take measurements in accordance with the dimension diagram. Always use a puller to straighten a damaged body or frame.

NUMBER OF SPOT WELDS AND PANEL POSITIONS
The number of spot welds and the panel positions to be removed are shown for your reference.
HINT: See "Symbols" on page IN–4, 5.

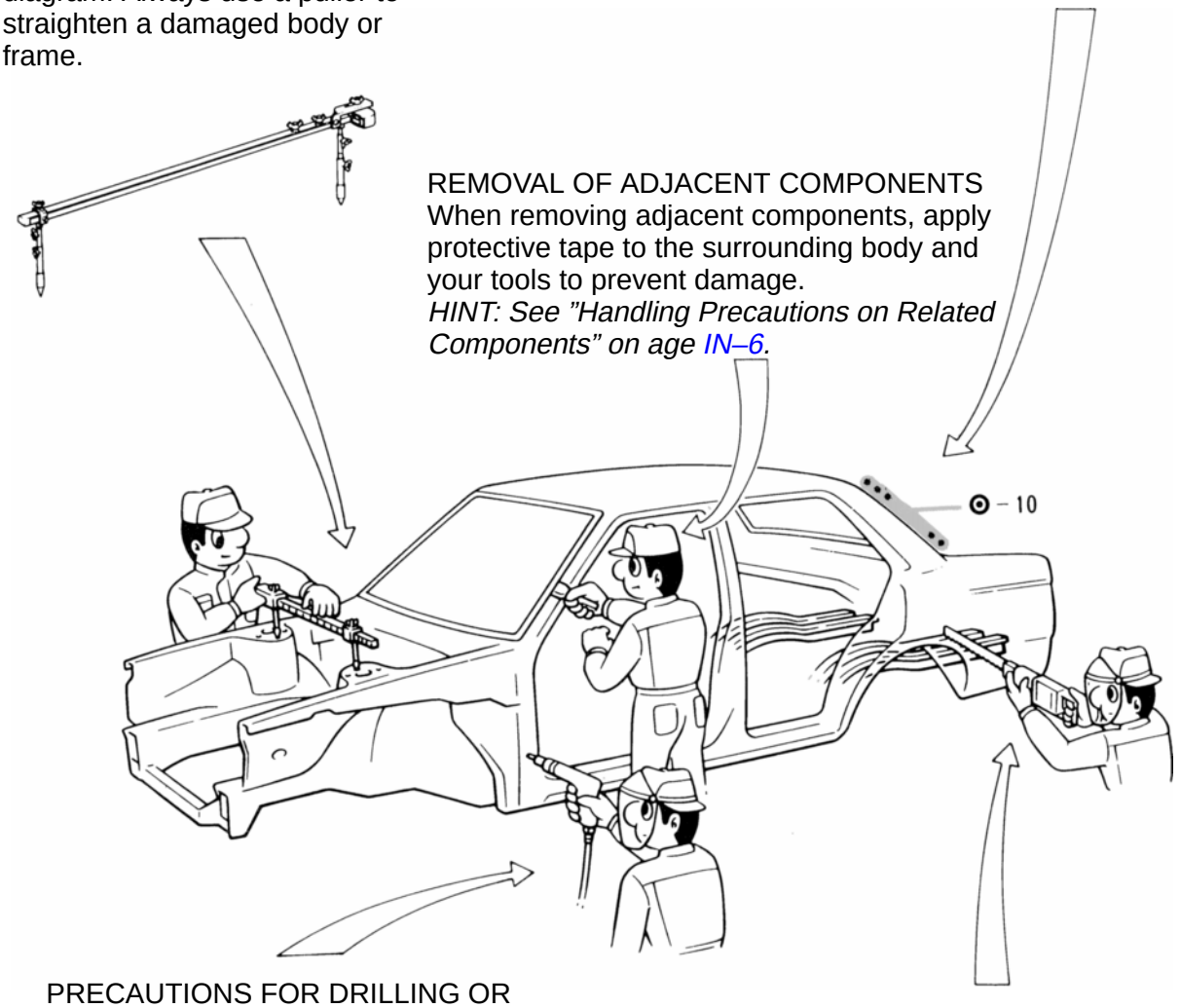

REMOVAL OF ADJACENT COMPONENTS
When removing adjacent components, apply protective tape to the surrounding body and your tools to prevent damage.
HINT: See "Handling Precautions on Related Components" on age IN–6.

PRECAUTIONS FOR DRILLING OR CUTTING
Check behind any area to be drilled or cut to insure that there are no hoses, wires, etc., that may be damaged.
HINT: See "Handling Precautions on Related Components" on page IN–6.

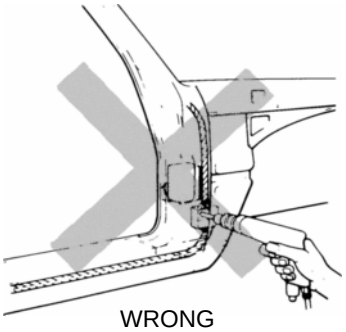
WRONG

CUTTING AREA
Always cut in a straight line and avoid reinforced area.

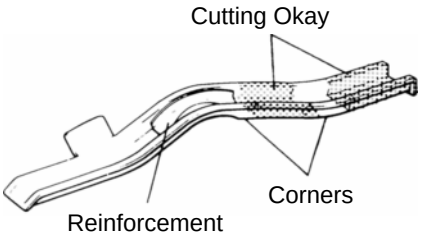

PREPARATION FOR INSTALLATION

SPOT WELD POINTS

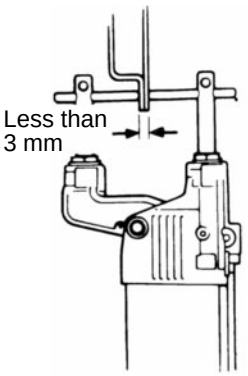

When welding panels with a combined thickness of over 3 mm (0.12 in.), use a MIG (Metal Inert Gas) welder for plug welding.
HINT: spot welding will not provide sufficient durability for panels over 3 mm (0.12 in.) thick.

APPLICATION OF WELD–THROUGH PRIMER (SPOT SEALER)

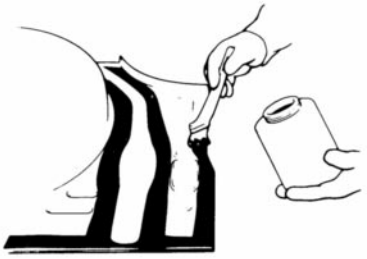

Remove the paint from the portion of the new parts and body to be welded, and apply weld–through primer.
HINT: See "ANTI–RUST TREATMENT" on page AR–2.



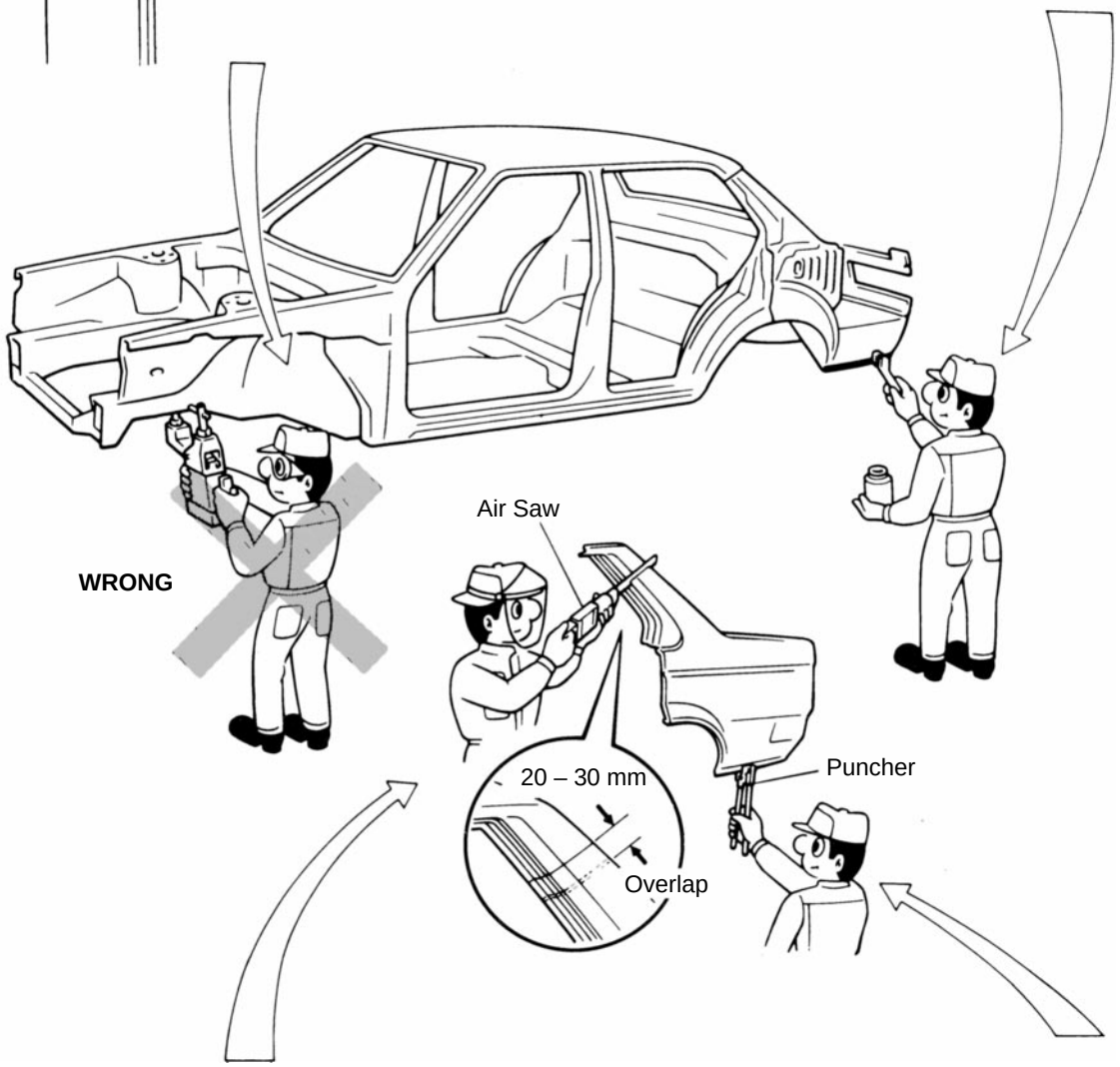

ROUGH CUTTING OF JOINTS
For joint areas, rough cut the new parts, leaving 20 – 30 mm (0.79 – 1.18 in.) overlap.

MAKING HOLES FOR PLUG WELDING
For areas where a spot welder cannot be used, use a puncher or drill to make holes for plug welding.

REFERENCE: mm (in.)

Thickness of welded portion	Size of plug hole
1.0 (0.04) under	5 (0.20) ϕ over
1.0 (0.04) – 1.5 (0.06)	6.5 (0.26) ϕ over
1.5 (0.06) over	8 (0.31) ϕ over

INSTALLATION

PRE–WELDING MEASUREMENTS
Always take measurements before installing underbody or engine components to insure correct assembly. After installation, confirm proper fit.

WELDING PRECAUTIONS

1. The number of welding spots should be as follows.
   Spot weld: 1.3 x No. of manufacturer's spots.
   Plug weld: More than No. of manufacturer's plugs.

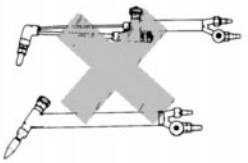

WRONG

2. Plug welding should be done with a MIG (Metal Inert Gas) welder. Do not gas weld or braze panels at areas other than specified.

POST–WELDLNG REFINISHING

1. Always check the welded spots to insure they are secure.
2. When smoothing out the weld spots with a disc grinder, be careful not to grind off too much as this–would weaken the weld.

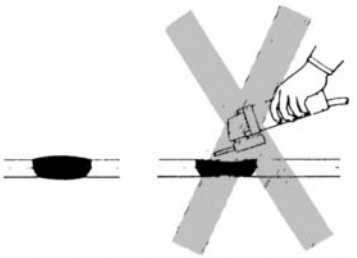

OKAY **WRONG**

SPOT WELD LOCATIONS
Try to avoid welding over previous spots.

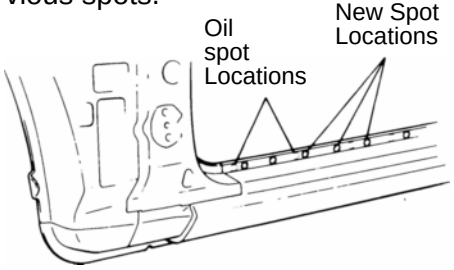

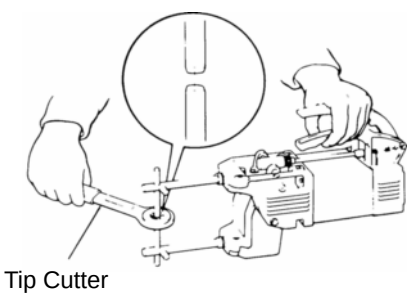

SPOT WELDING PRECAUTIONS

1. The shape of the welding tip point has an effect on the strength of the weld.
2. Always insure that the seams and welding tip are free of paint.

ANTI–RUST TREATMENT

When replacing body panels, always apply body sealer, anti–rust agent or undercoat according to the requirements of your country.
HINT: For further details, see the description given in section AR of this manual.

BODY SEALER
Apply body sealer to the required areas.



Cartridge Type



Tube Type

ANTI–RUST AGENT (WAX)
Apply anti–rust agent to following sections.

- Inside of the hems of the doors and hood.
- Around the hinges of the doors and hood.
- Inside of the welded parts with boxed cross–section.

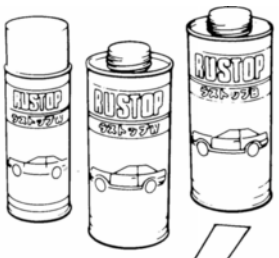

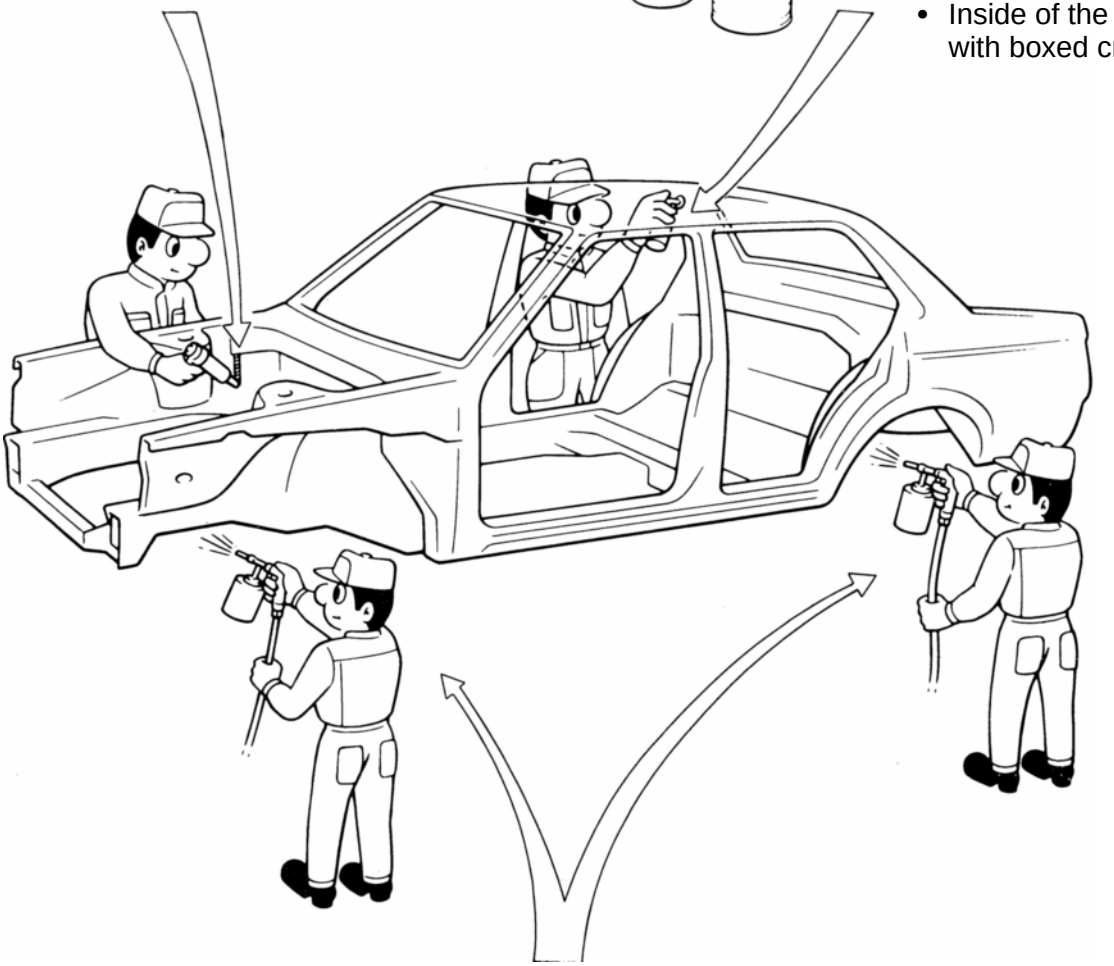



Undercoating (Oil base)



Undercoating (Water base)

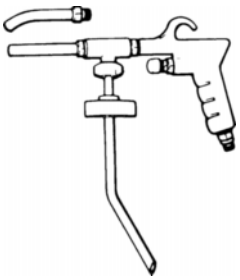

spray Gun

UNDERCOAT
Apply undercoat to the underbody and wheel housings.

VEHICLE LIFT AND SUPPORT LOCATIONS

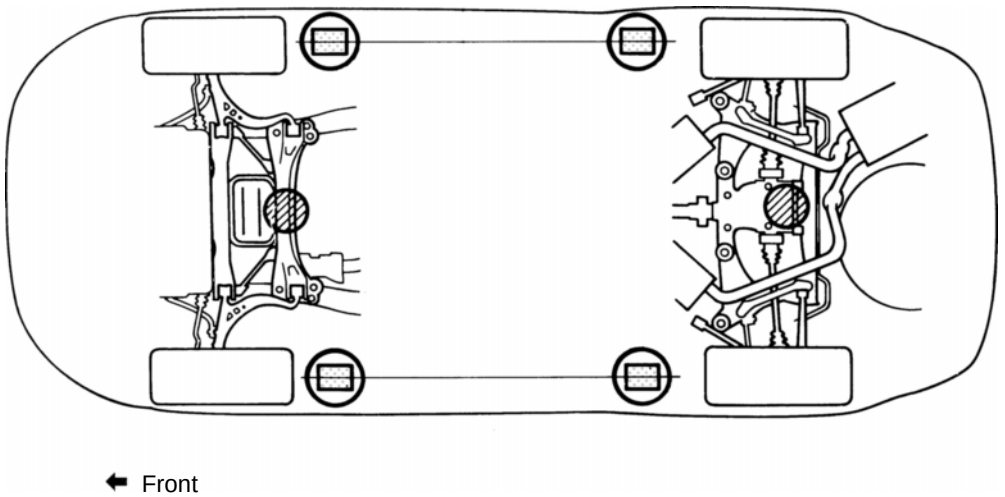

⬅ Front

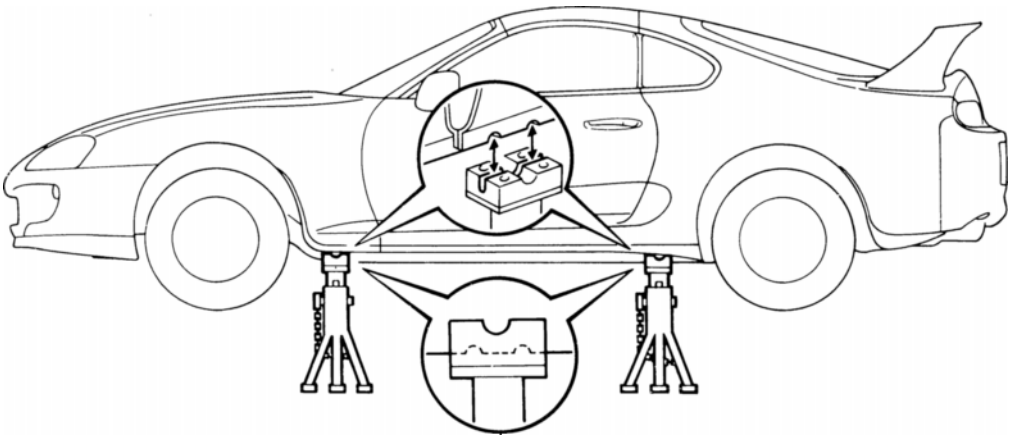

JACK POSITION

Front . . . . . Front crossmember
Rear . . . . . Rear axle beam
CAUTION: Before jacking–up the rear and front, make sure the car is not carrying any extra weight.

PANTOGRAPH JACK POSITION

SUPPORT POSITION

Safety stand and swing arm type lift . . . . . .

ABBREVIATIONS USED IN THIS MANUAL

For convenience, the following abbreviations are used in this manual.

ABS	Antilock Brake System
A/C	Air Conditioner
assy	assembly
ECT	Electronic Controlled Transmission
ECU	Electronic Control Unit
e.g.	Exempli Gratia (for Example)
Ex.	Except
FWD	Front Wheel Drive Vehicles
4WD	Four Wheel Drive Vehicles
in.	inch
LH	Left–hand
LHD	Left–hand Drive
MIG	Metal Inert Gas
M/Y	Model Year
PPS	Progressive Power Steering
RH	Right–hand
RHD	Right–hand Drive
SRS	Supplemental Restraint System
w/	with
w/o	without

HANDLING PRECAUTIONS

1. The repair procedure for plastic body parts must conform with the type of plastic material.
2. Plastic body parts are identified by the codes in the following chart.
3. When repairing metal body parts adjoining plastic body parts (by brazing, frame cutting, welding, painting etc.), consideration must given to the property of the plastic.

Code	Material name	Heat* resistant temperature limit °C (°F)	Resistance to alcohol or gasoline	Notes
AAS	Acrylonitrile Acrylic Styrene	80 (176)	Alcohol is harmless if applied only for short time in small amounts (e.g., quick wiping to remove grease).	Avoid gasoline and organic or aromatic solvents.
ABS	Acrylonitrile Butadiene Styrene	80 (176)	Alcohol is harmless if applied only for short time in small amounts (e.g., quick wiping to remove grease).	Avoid gasoline and organic or aromatic solvents.
AES	Acrylonitrile Ethylene Styrene	80 (176)	Alcohol is harmless if applied only for short time in small amounts (e.g., quick wiping to remove grease).	Avoid gasoline and organic or aromatic solvents.
BMC	Bulk Moulding Compound	150 (302)	Alcohol and gasoline are harmless.	Most solvents are harmless.
CAB	Cellulose Acetate	80 (176)	Alcohol is harmless if applied only for short time in small amounts (e.g., quick wiping to remove grease).	Avoid gasoline and organic or aromatic solvents.
EPDM	Ethylene Propylene	100 (212)	Alcohol is harmless. Gasoline is harmless if applied only for short time in small amounts.	Most solvents are harmless but avoid dipping in gasoline, solvents, etc.
PA	Polyamide (Nylon)	80 (176)	Alcohol and gasoline are harmless.	Avoid battery acid.
PBT	Polybutylene Terephthalate	160 (320)	Alcohol and gasoline are harmless.	Most solvents are harmless.
PC	Polycarbonate	120 (248)	Alcohol is harmless.	Avoid gasoline, brake fluid, wax, wax removers and organic solvents. Avoid alkali.
PE	Polyethylene	80 (176)	Alcohol and gasoline are harmless.	Most solvents are harmless.
PET	Polyethylene Terephthalate	75 (176)	Alcohol and gasoline are harmless.	Avoid dipping in water.

* Temperatures higher than those listed here may result in material deformation during repair.

Code	Material name	Heat* resistant temperature limit °C (°F)	Resistance to alcohol or gasoline	Notes
PMMA	Polymethyl Methacrylate	80 (176)	Alcohol is harmless if applied only for short time in small amounts.	Avoid dipping or immersing in alcohol, gasoline, solvents, etc.
POM	Polyoxymethylene (Polyacetal)	100 (212)	Alcohol and gasoline are harmless.	Most solvents are harmless.
PP	Polypropylene	80 (176)	Alcohol and gasoline are harmless.	Most solvents are harmless.
PPO	Modified Polyphenylene Oxide	100 (212)	Alcohol is harmless.	Gasoline is harmless if applied only for quick wiping to remove grease.
PS	Polystyrene	60 (140)	Alcohol and gasoline are harmless if applied only for short time in small amounts.	Avoid dipping or immersing in alcohol, gasoline, solvents, etc.
PUR	Polyurethane	80 (176)	Alcohol is harmless if applied only for very short time in small amounts (e.g., quick wiping to remove grease).	Avoid dipping or immersing in alcohol, gasoline, solvents, etc.
PVC	Polyvinylchloride (Vinyl)	80 (176)	Alcohol and gasoline are harmless if applied only for short time in small amounts (e.g., quick wiping to remove grease).	Avoid dipping or immersing in alcohol, gasoline, solvents, etc.
SAN	Styrene Acrylonitrile	80 (176)	Alcohol is harmless if applied only for short time in small amounts (e.g., quick wiping to remove grease).	Avoid dipping or immersing in alcohol, gasoline, solvents, etc.
SMC	Sheet Moulding Compound	180 (356)	Alcohol and gasoline are harmless.	Avoid alkali.
TPO	Thermoplastic Olefine	80 (176)	Alcohol is harmless. Gasoline is harmless if applied only for short tune in small amounts.	Most solvents are harmless but avoid dipping in gasoline, solvents, etc.
TPU	Thermoplastic Polyurethane	80 (176)	Alcohol is harmless if applied only for very short time in small amounts (e.g., quick wiping to remove grease).	Avoid dipping or immersing in alcohol, gasoline, solvents, etc.
TSOP	TOYOTA Supper Olefine Polymer	80 (176)	Alcohol and gasoline are harmless.	Most solvents are harmless.
UP	Unsaturated Polyester	110 (233)	Alcohol and gasoline are harmless.	Avoid alkali.

* Temperatures higher than those listed here may result in material deformation during repair.

LOCATION OF PLASTIC BODY PARTS

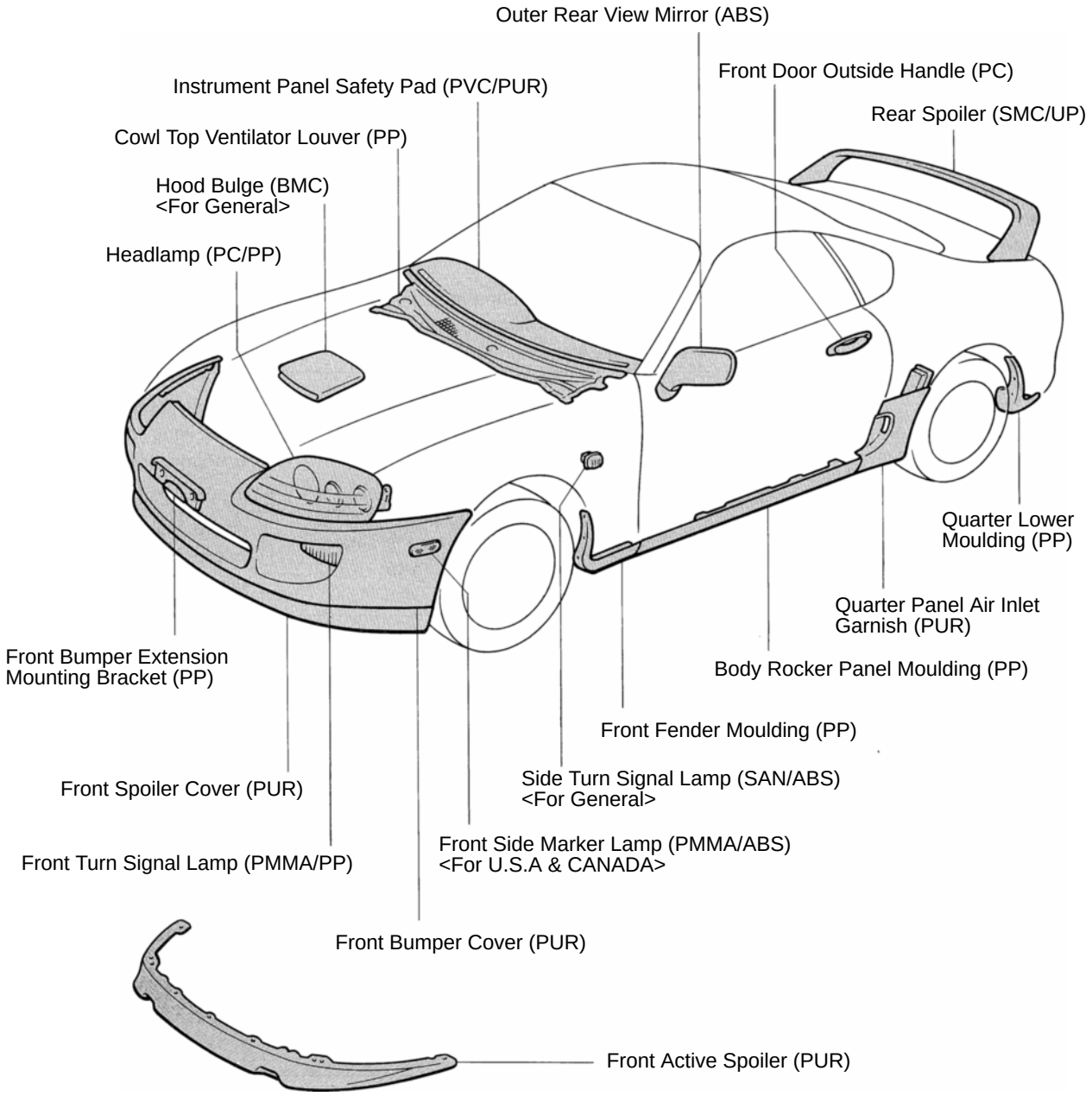

HINT:

- *Resin material differs with model.*

/ *Made up of 2 or more kinds of materials.*

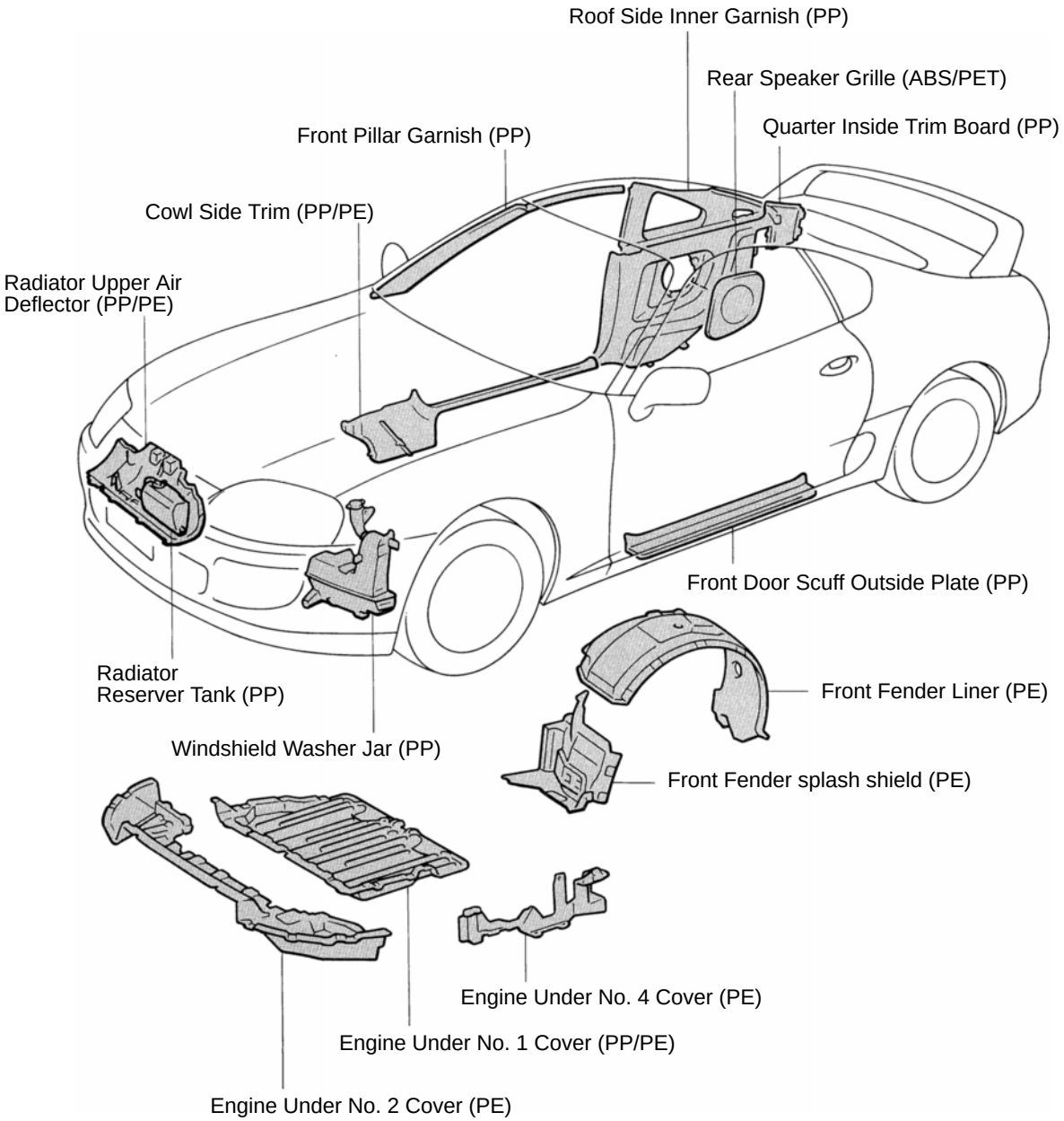

HINT:

- *Resin material differs with model.*

/ *Made up of 2 or more kinds of materials.*

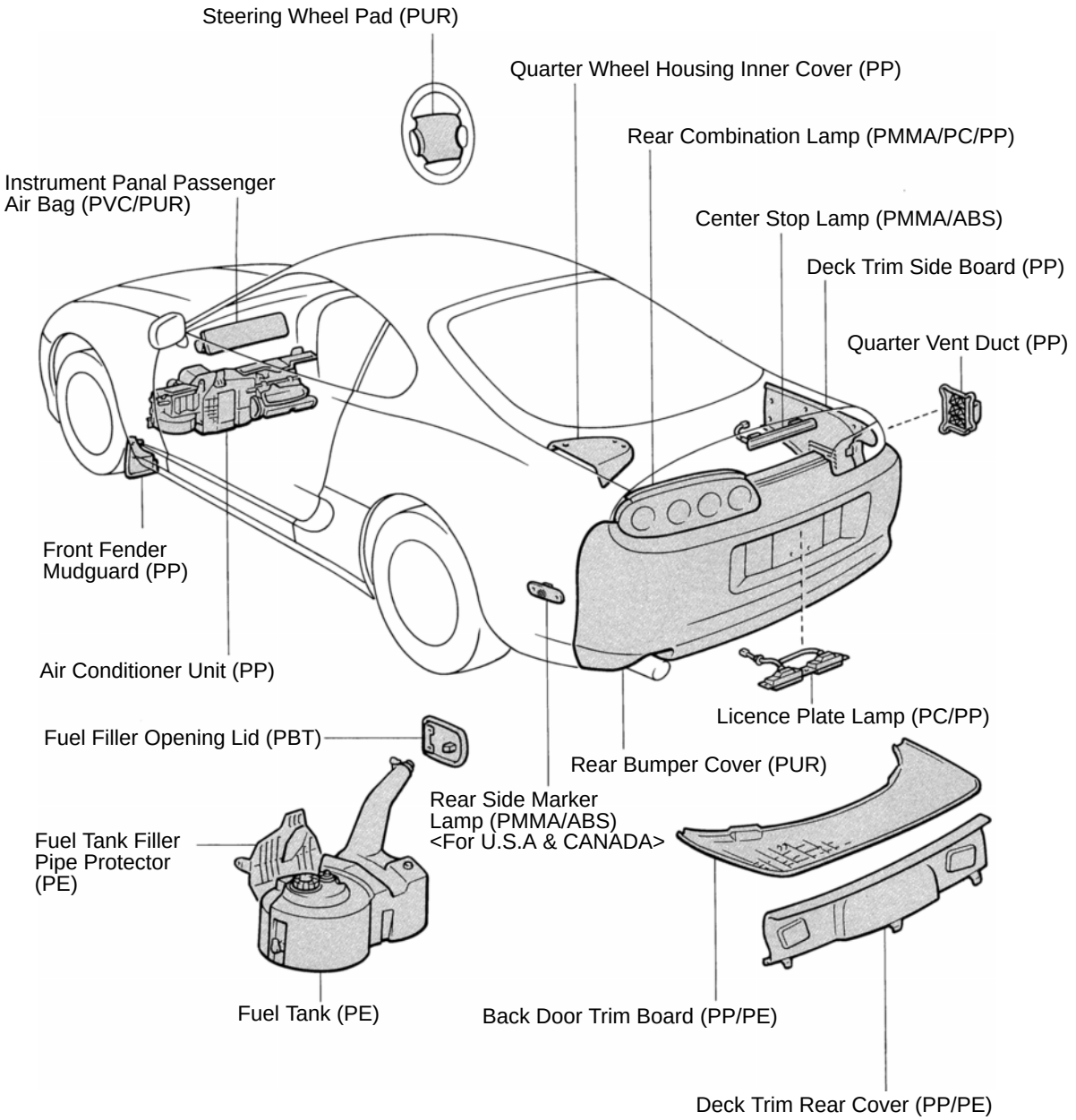

HINT:

- *Resin material differs with model.*

/ Made up of 2 or more kinds of materials.

STANDARD BODY MARKS

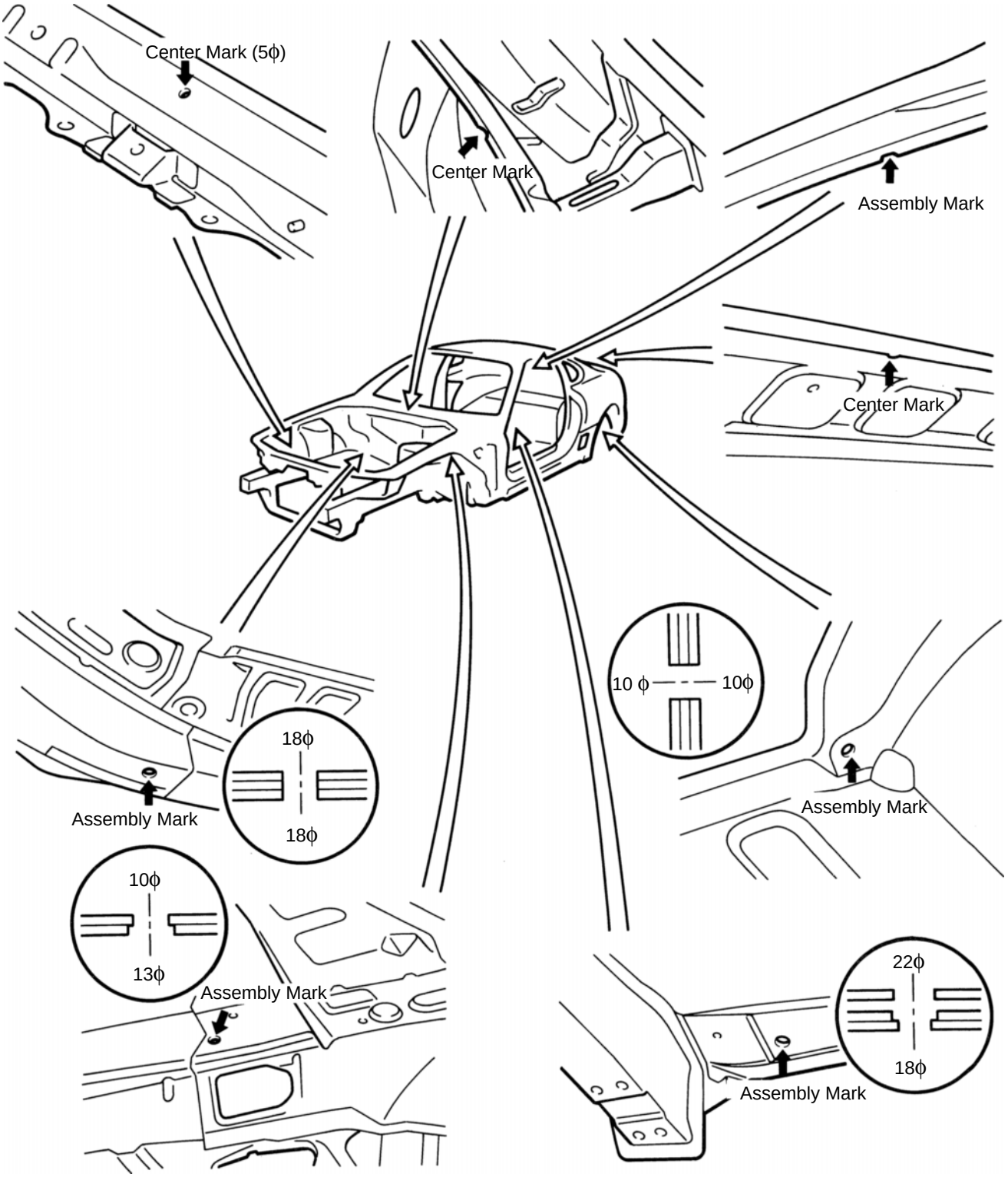

mm	in.
5	0.20
10	0.39
13	0.51
18	0.71
22	0.86

HIGH–STRENGTH STEEL (HSS) PARTS

Generally, High–Strength Steel (HSS) is that which has an intensity value of at 35 kgf/mm^2 (343 MPa), and distinguished from mild steel.

The handling of HSS is the same as for mild steel, but the following should be observed.

1. Panel Hammering: Because HSS is thinner than mild steel, care should be taken to avoid warping during hammering operations.
2. Removing Spot Welds: Because HSS is tougher than mild steel, damage will occur more easily to a regular drill. Therefore, an HSS Spot Cutter is recommended.
   Also, use a high–torque drill at low speed, and supply grinding oil to the drill during use.
3. Panel Welding: Panel welding procedures for HSS are exactly the same as for mild steel. Plug welding should be done with MIG (Metal Inert Gas) welder. Do not gas weld or braze panels at areas other than specified.

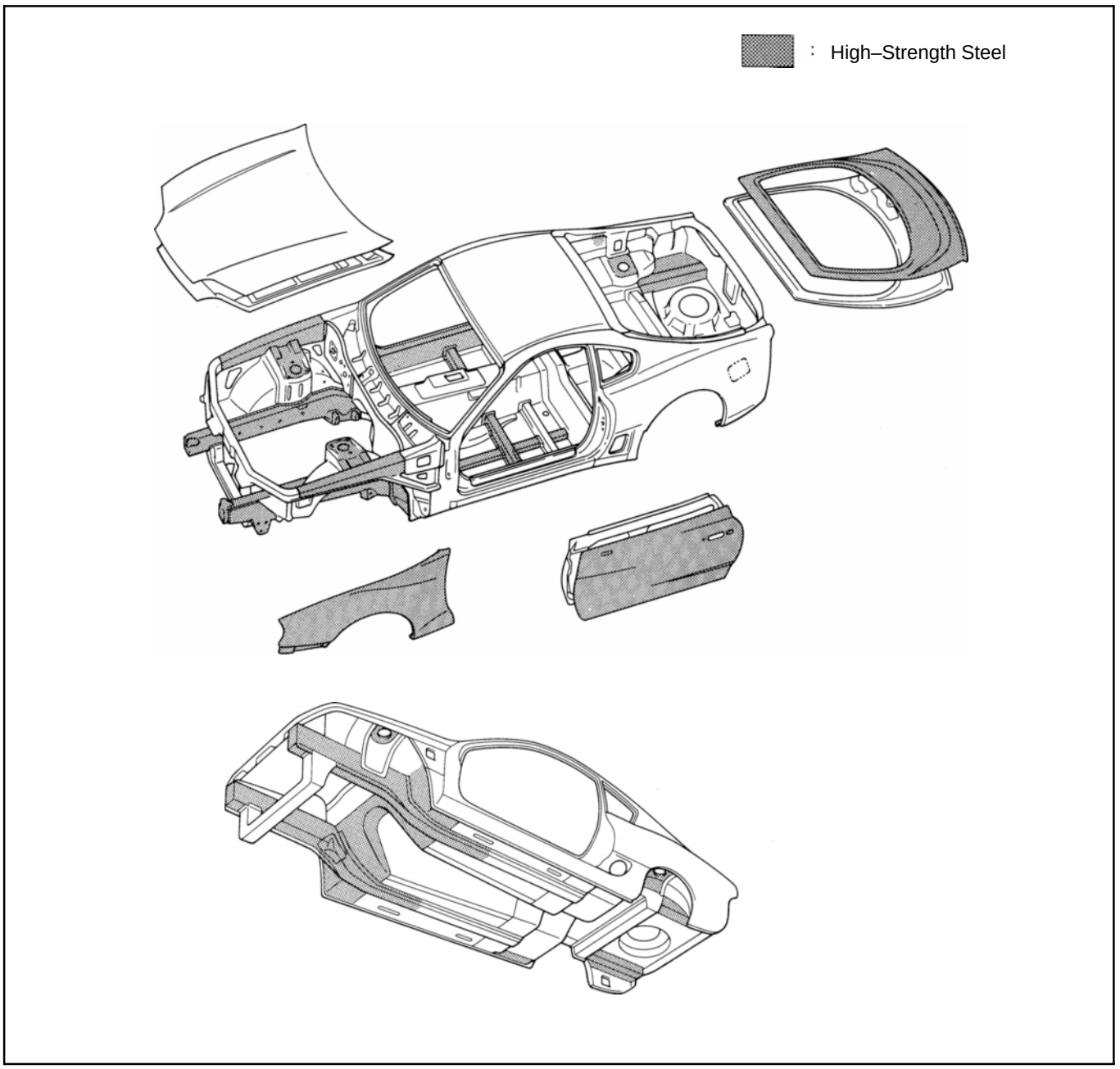

RUST–RESISTANT SHEET STEEL PARTS

Rust–Resistant Sheet Steel have zinc, tin or aluminum etc, plating over the base metal surface in order to improve the corrosion resistance of the sheet metal. For the vehicle's body panels, galvannealed sheet steel is widely used.
Body panel on TOYOTA models are made of two different galvannealed sheet steel. The ordinary galvannealed sheet steel has a zinc–iron alloy plating over the base metal surface. Zinc–iron alloy double–layer galvannealed sheet steel has zinc–iron alloy plating on both the outside and the back surface, plus a further iron–rich zinc–iron alloy plating which has good paint adhesion. These two galvannealed sheet steels are used selectively according to need.

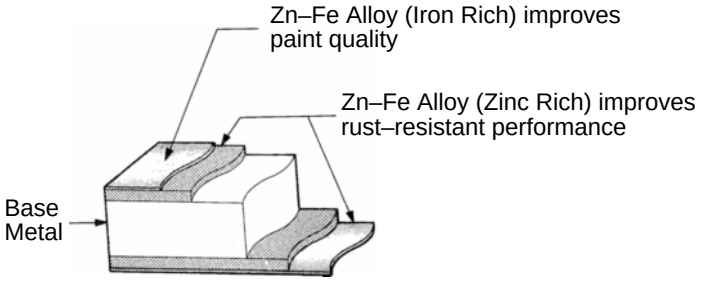

Excelite II

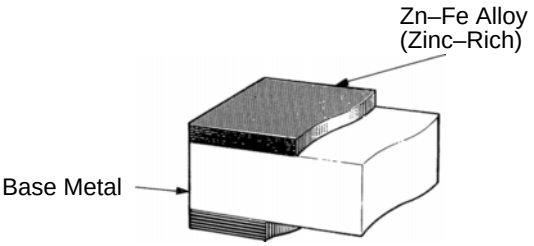

Galvannealed Sheet Steel

The handing of Rust–Resistant Sheet Steel is the same as for ordinary sheet steel, but the following should be observed.

1. Panel Welding: The paint as well as the zinc portion must be removed completely from the welding area to guarantee good welding integrity.
2. Anti–Rust Treatment: Since the zinc plating is lost after welding, anti–rust treatment of the welded area must be thoroughly performed (refer to section AR).

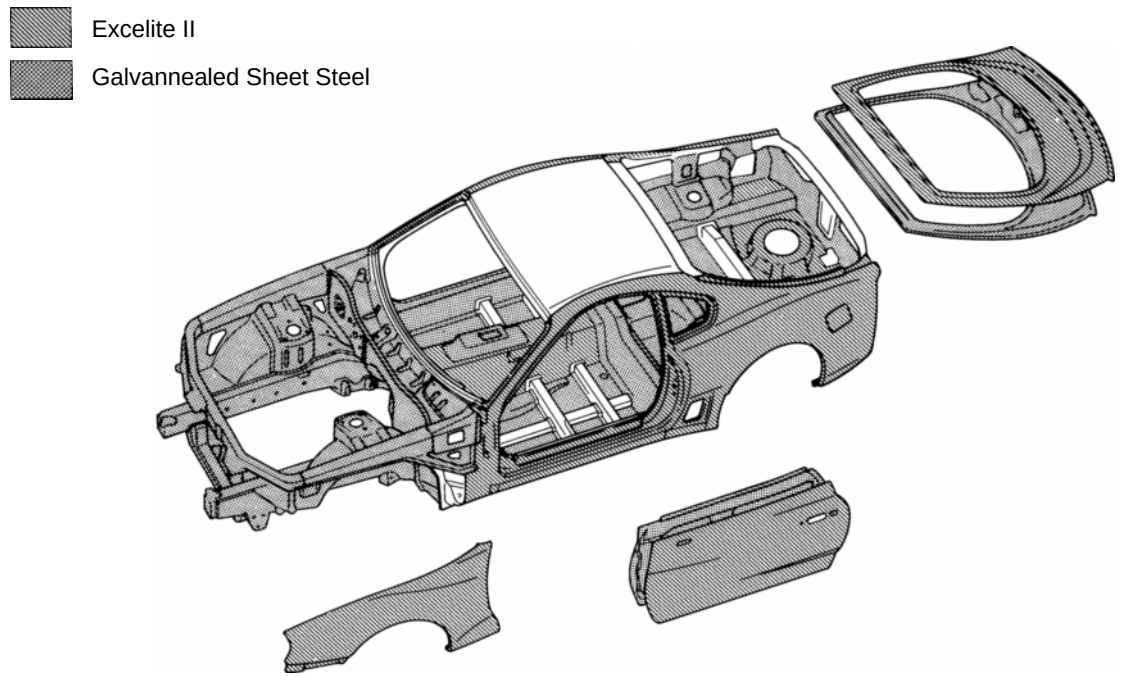

RADIATOR UPPER SUPPORT (ASSY)

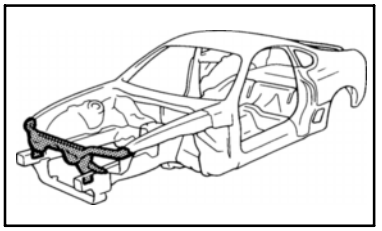

REMOVAL

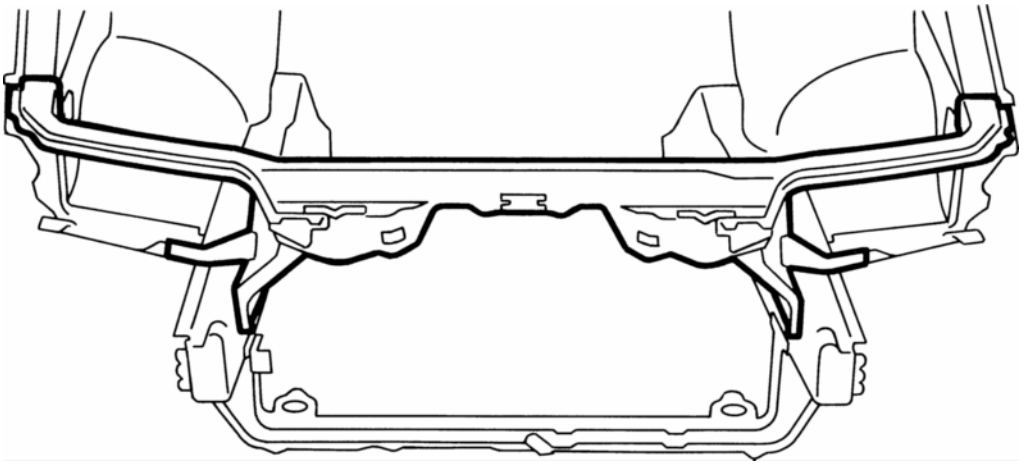

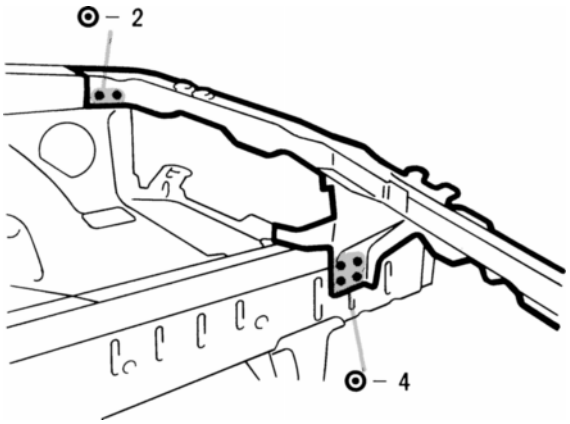

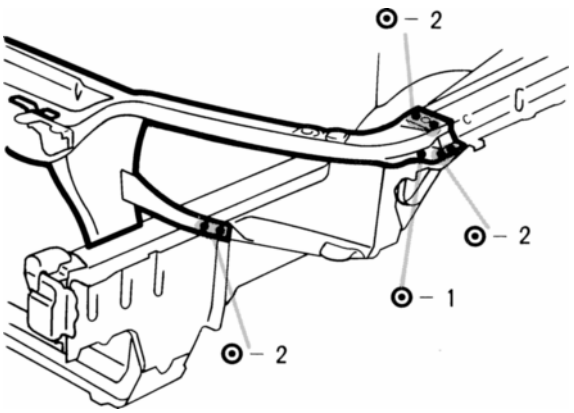

INSTALLATION

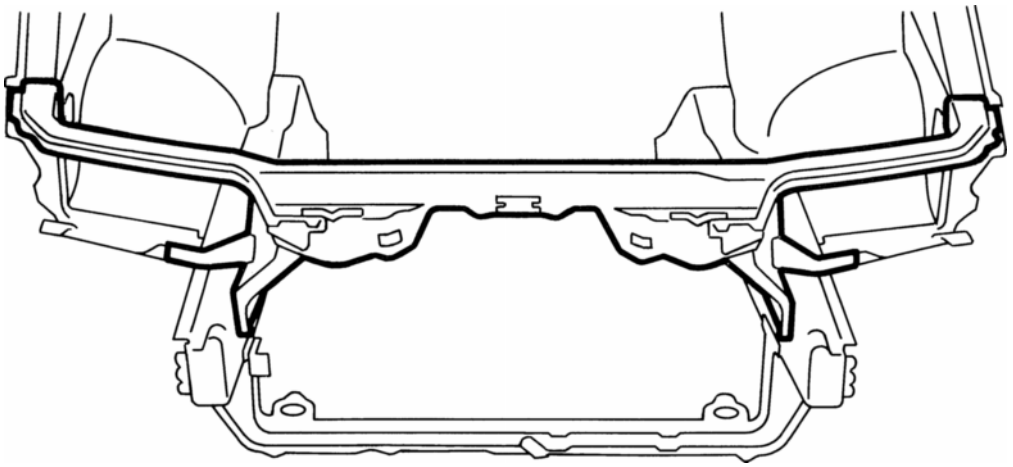

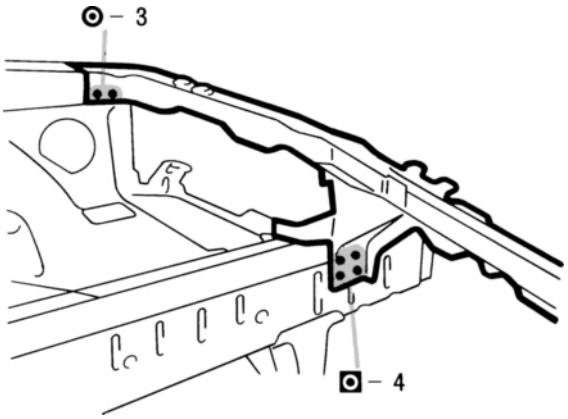

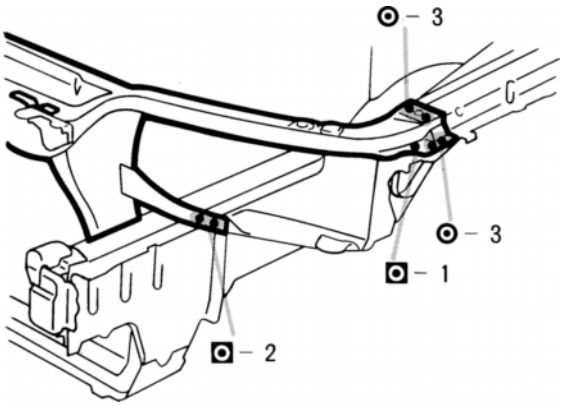

1. Temporarily install the new parts and measure each part in accordance with the body dimension diagram.

HINT: First install the hood lock support.

FRONT CROSSMEMBER (ASSY)

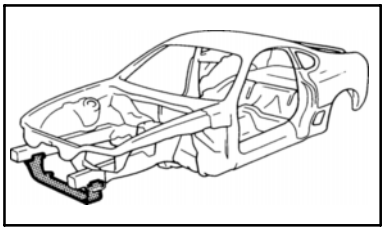

REMOVAL

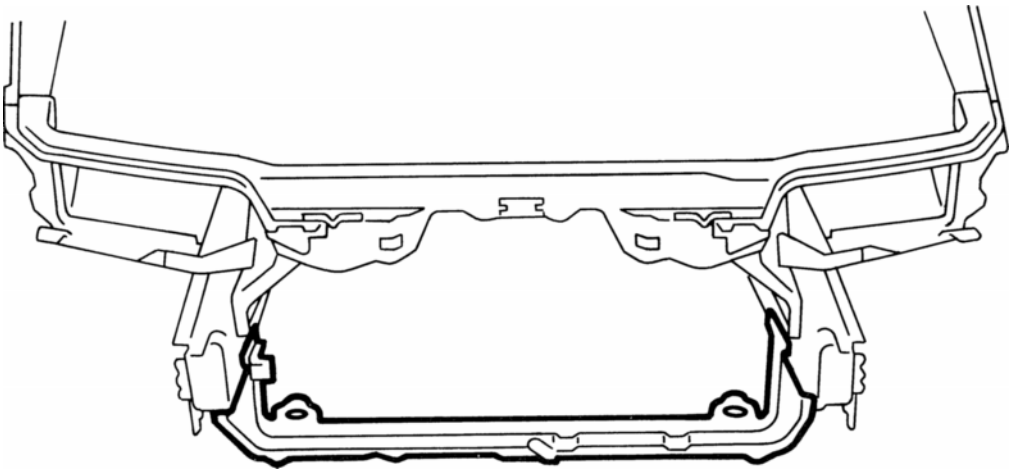

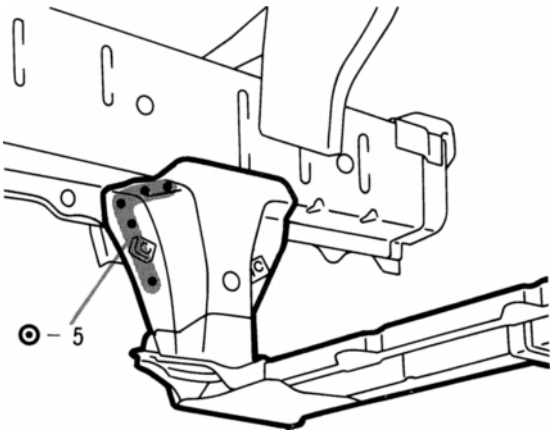

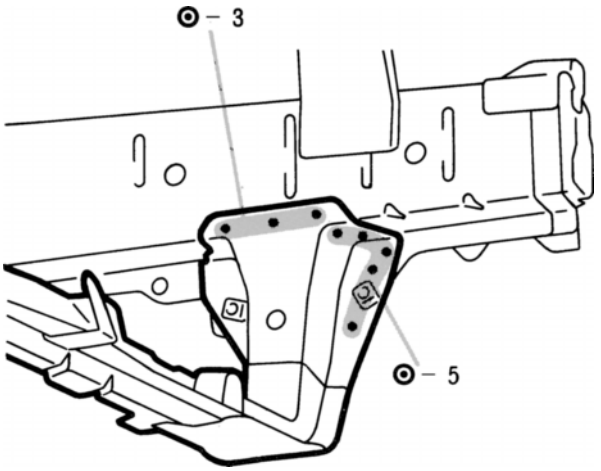

INSTALLATION

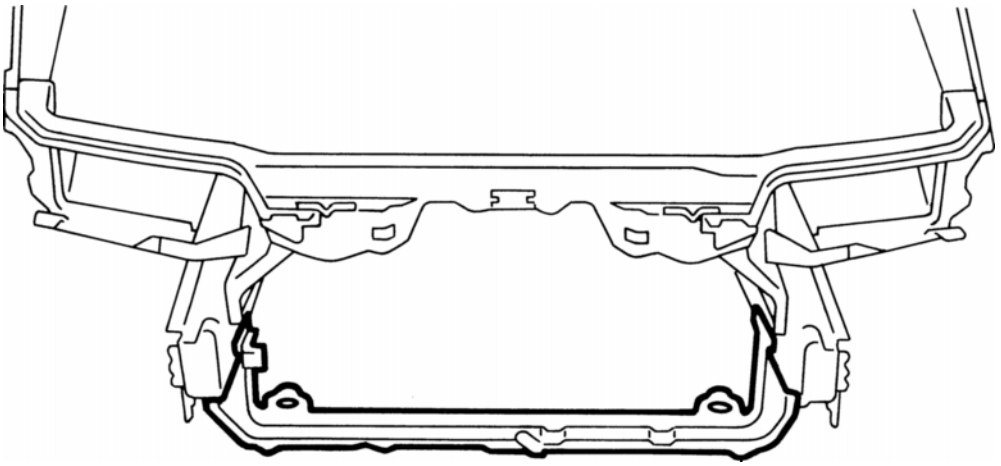

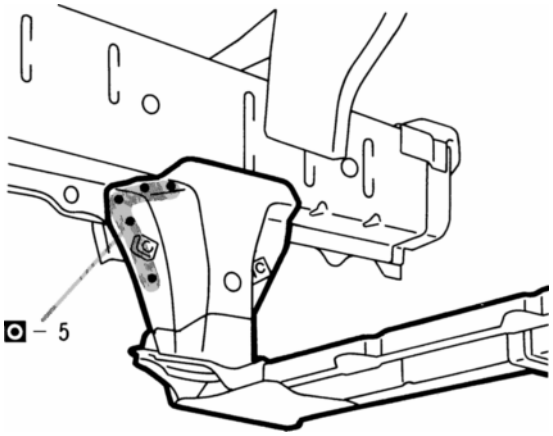

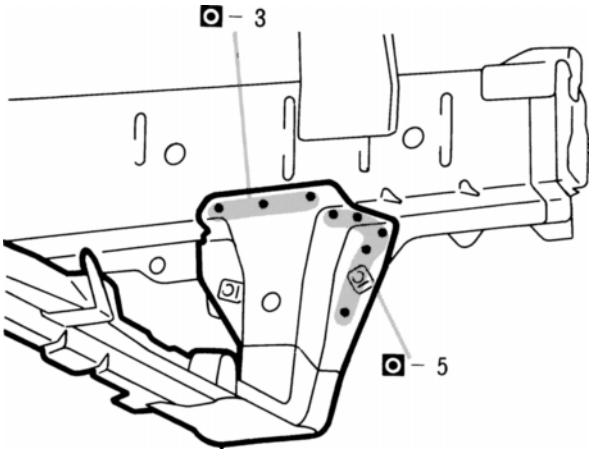

1. Temporarily install the new parts and measure each part in accordance with the body dimension diagram.

FRONT APRON TO COWL SIDE UPPER MEMBER (ASSY)

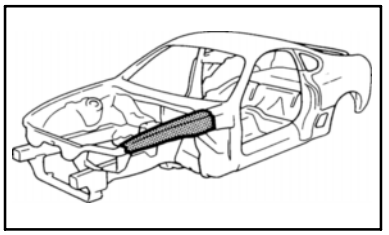

REMOVAL (With the front fender front apron removed.)

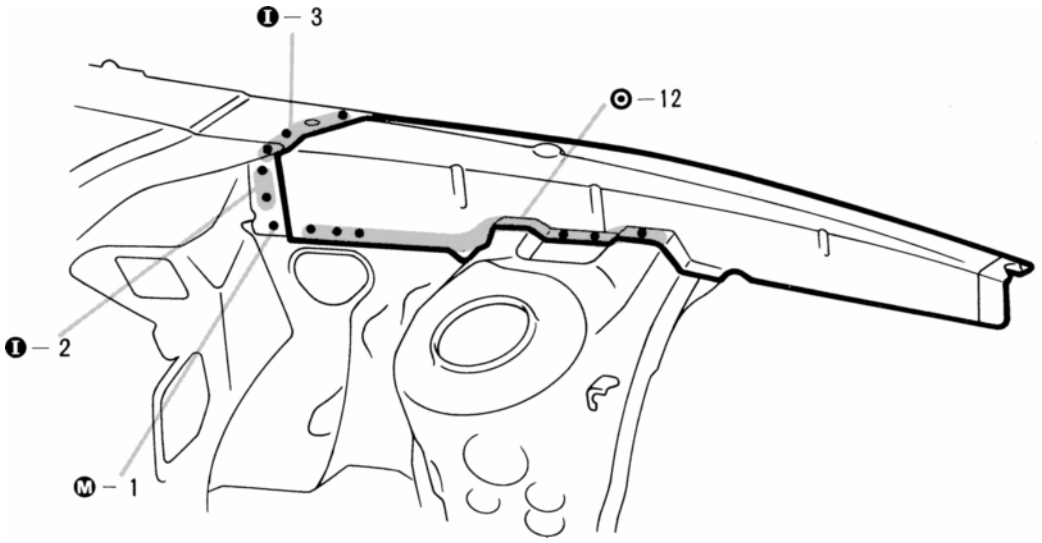

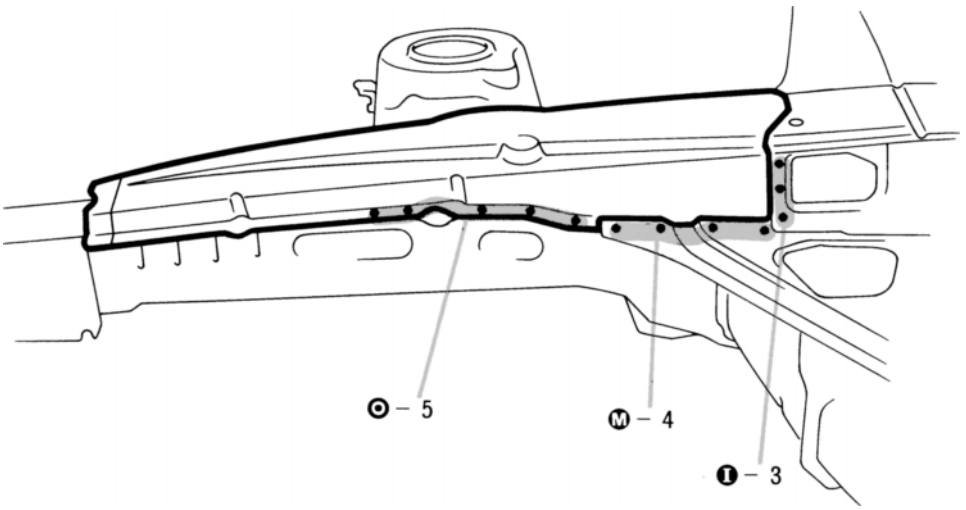

INSTALLATION

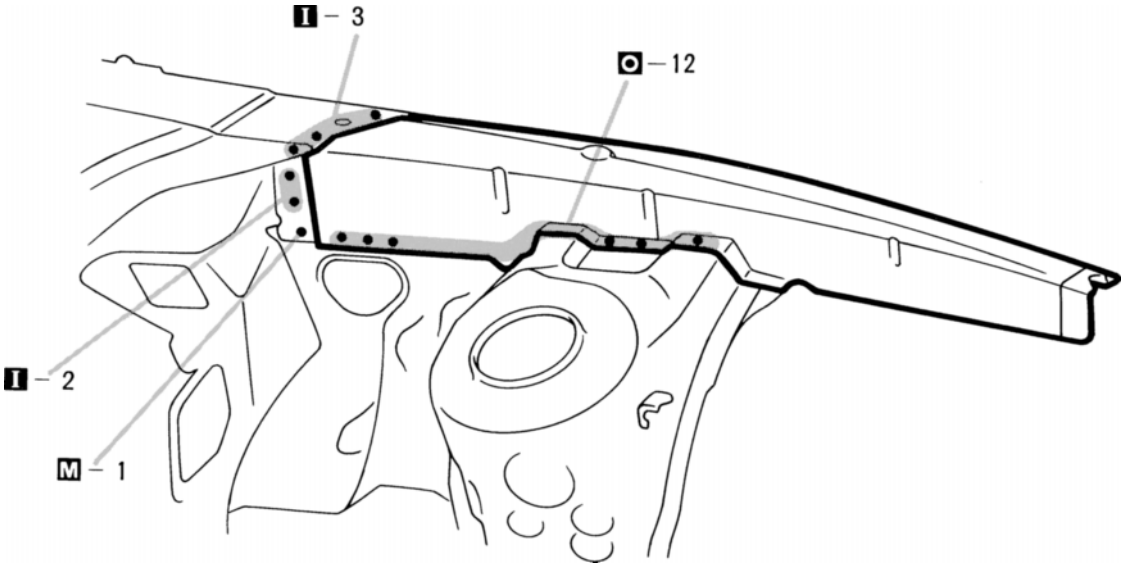

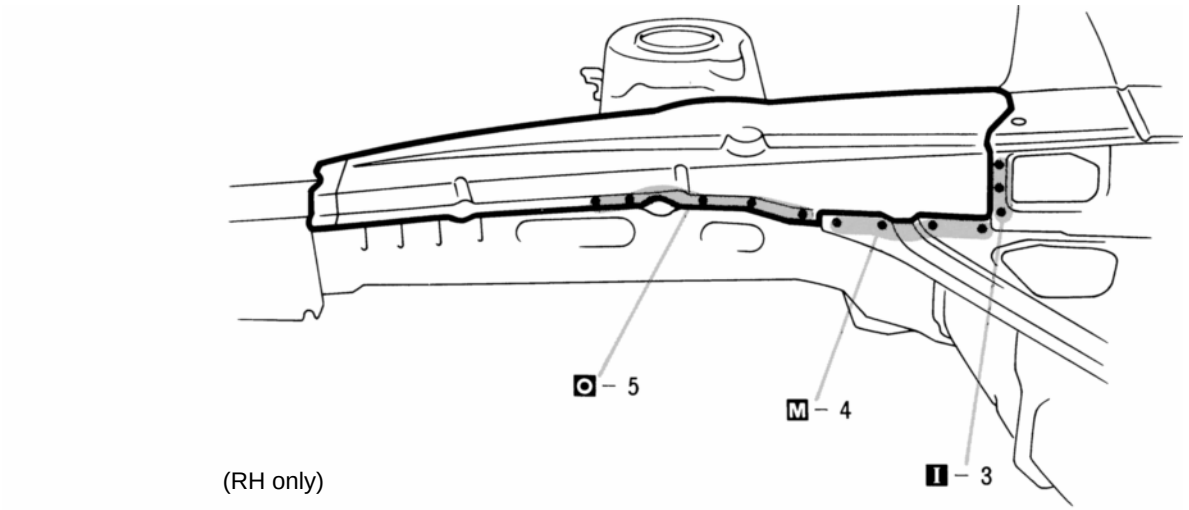

(RH only)

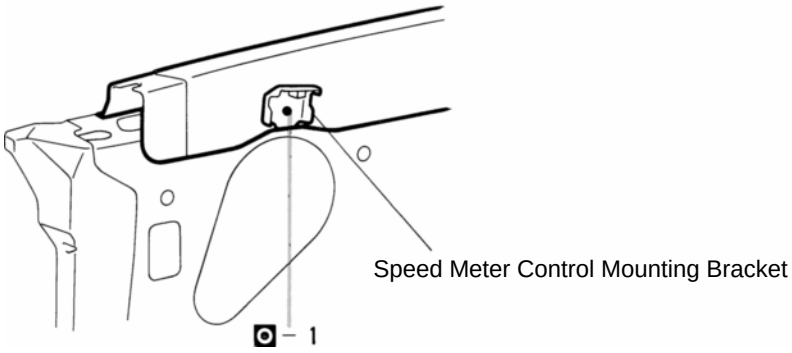

1. Temporarily install the new parts and measure each part in accordance with the body dimension diagram.
2. Temporarily install the front fender and hood, and check the fit.

FRONT FENDER FRONT APRON (ASSY)

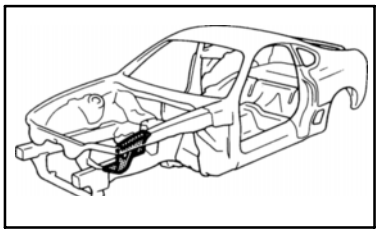

REMOVAL (With the radiator upper support removed.)

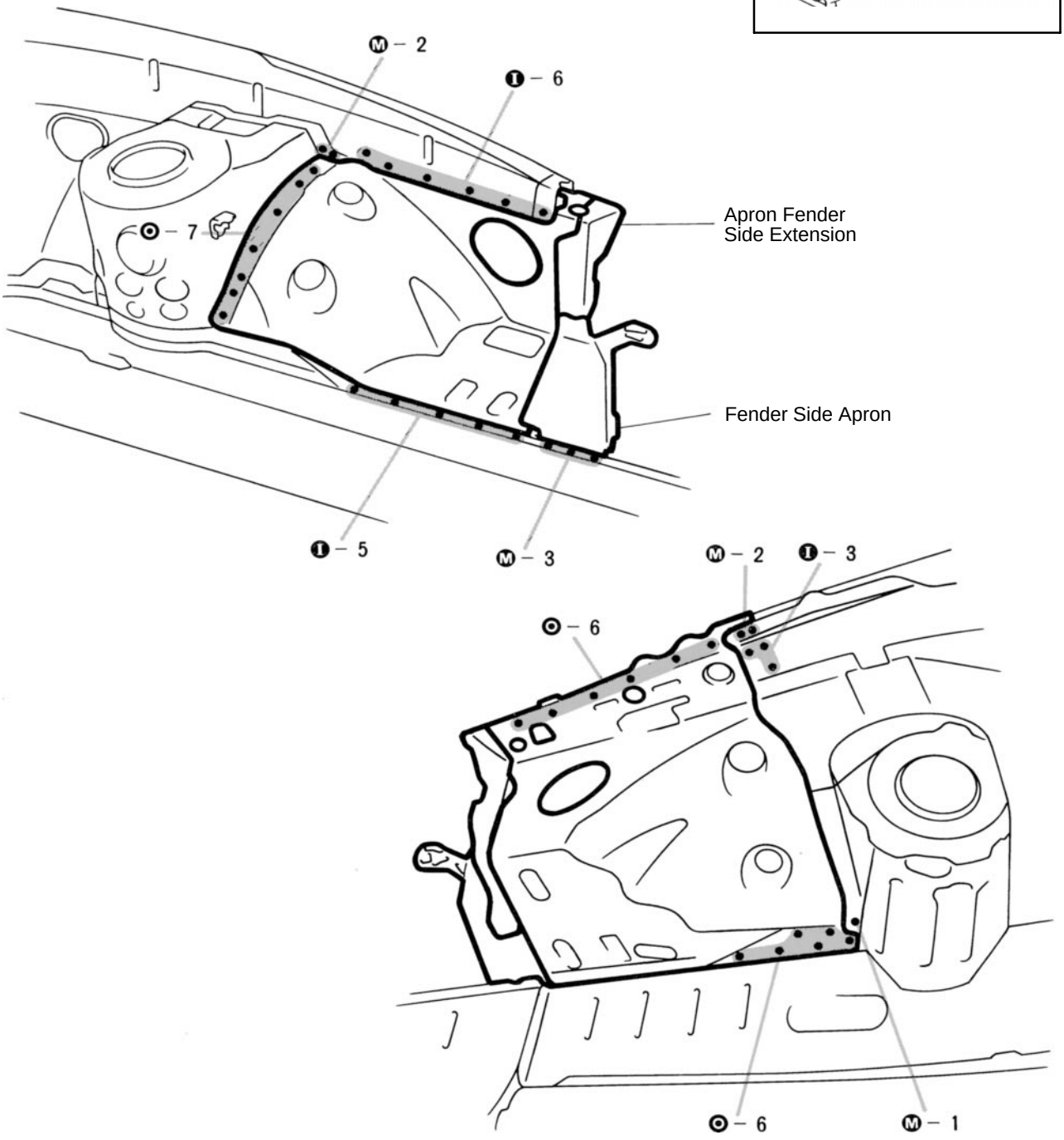

1. Replace the fender side apron and apron fender side extension at the same time.

INSTALLATION

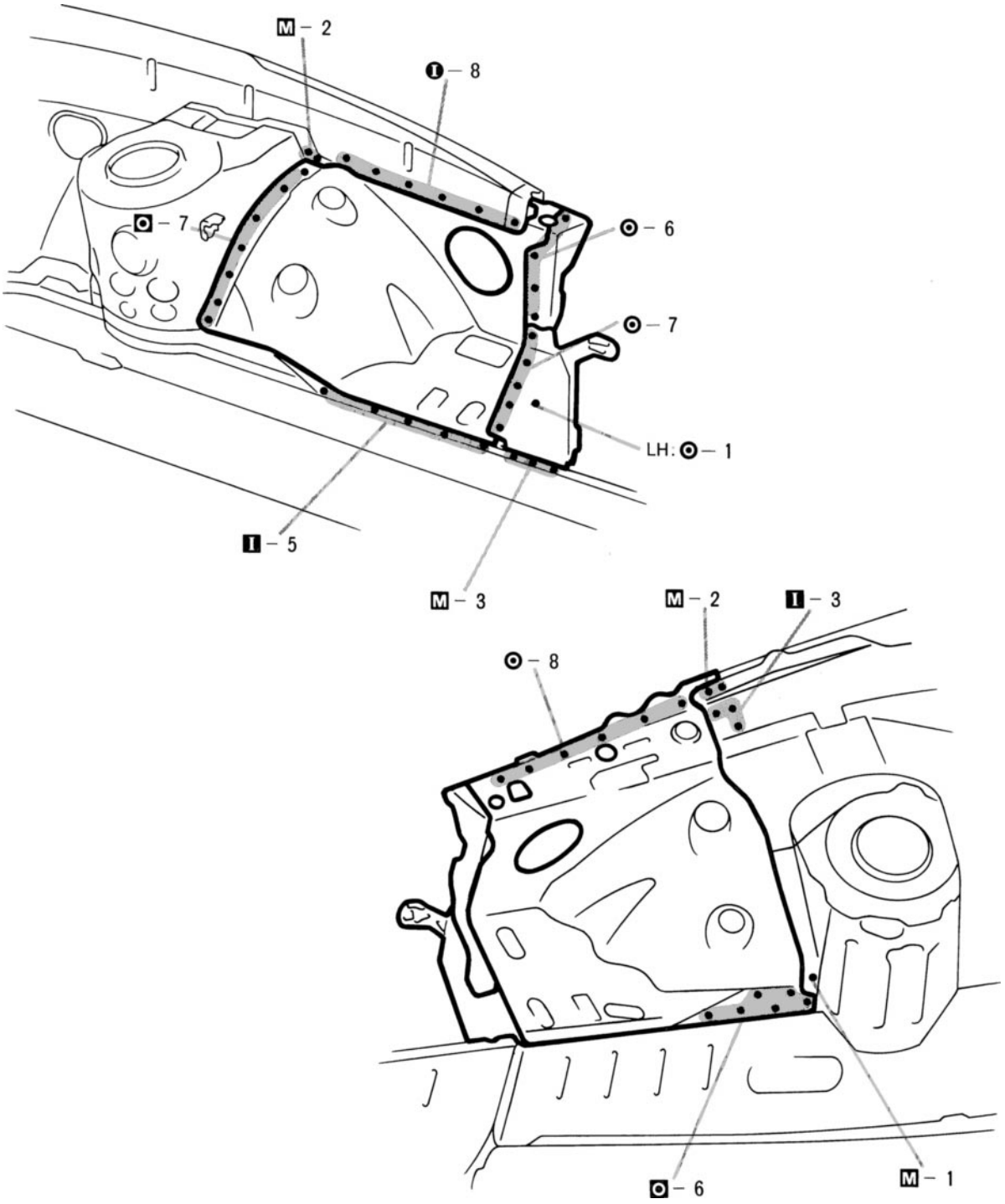

1. Temporarily install the new parts and measure each part in accordance with the body dimension diagram.

FRONT FENDER APRON (ASSY)

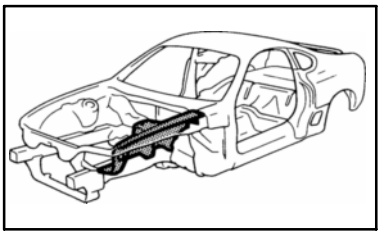

REMOVAL (With the radiator upper support removed.)

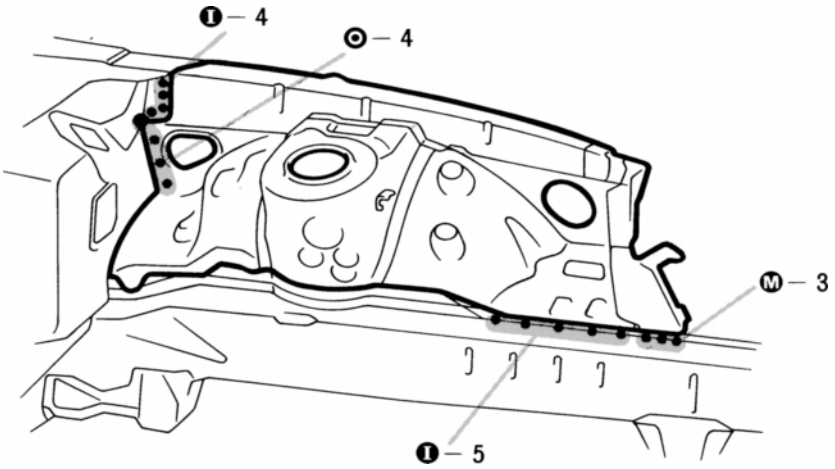

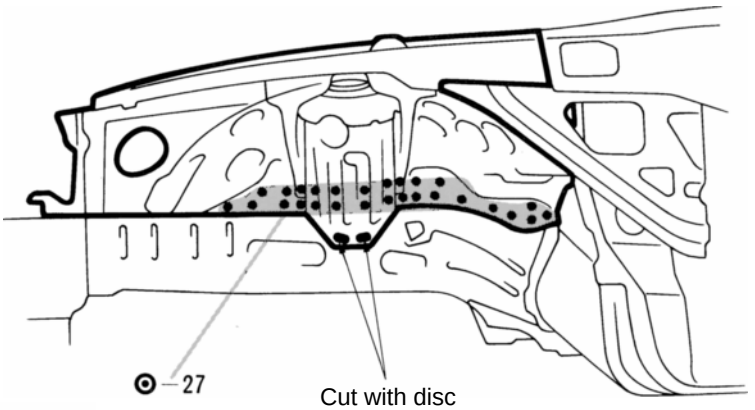

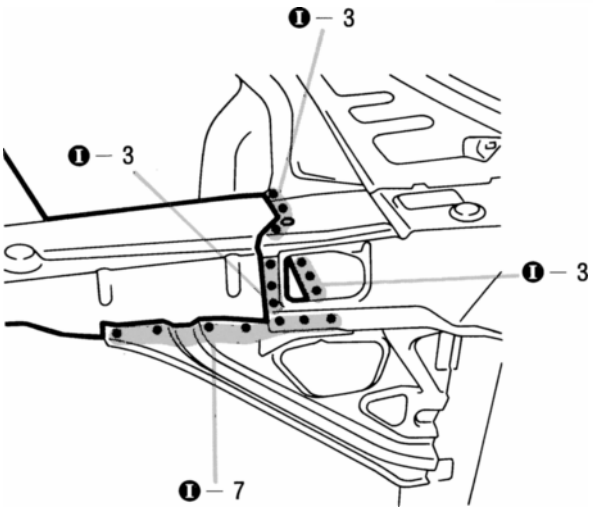

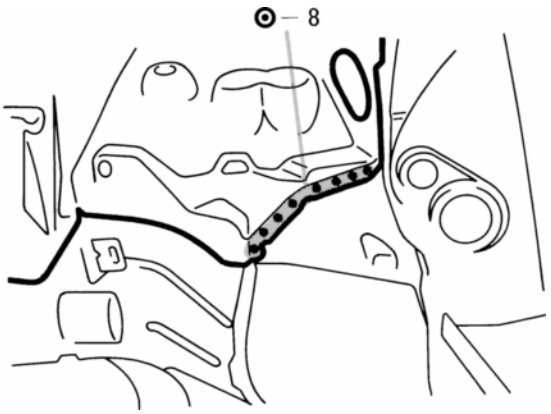

INSTALLATION

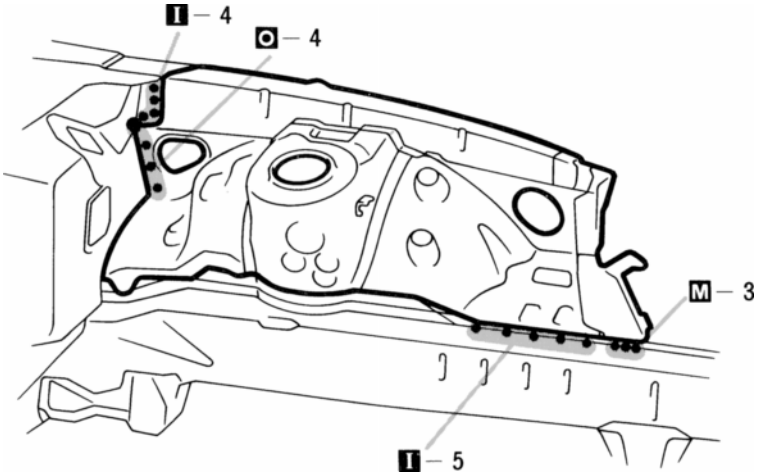

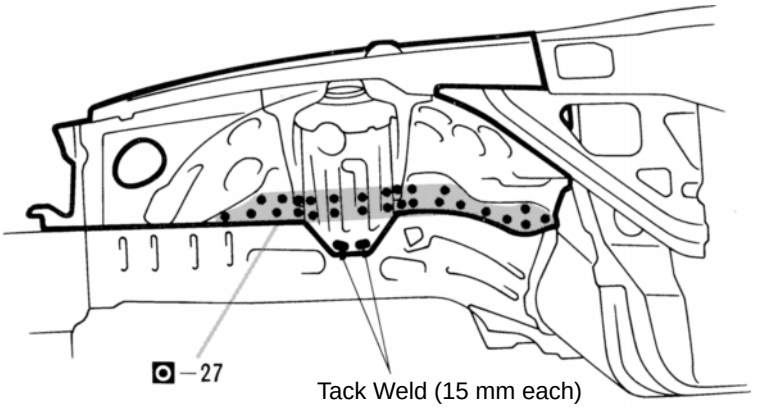

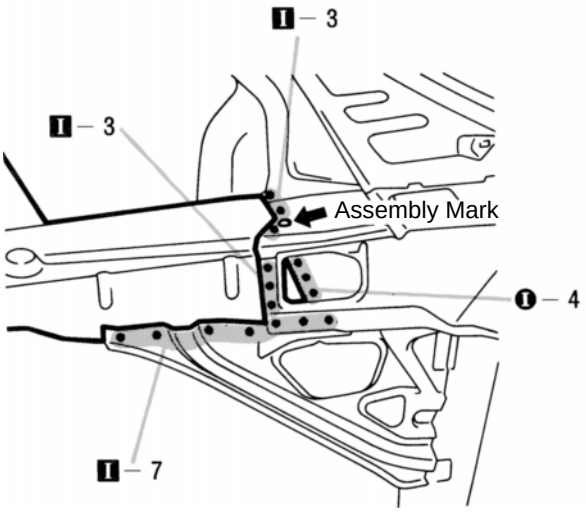

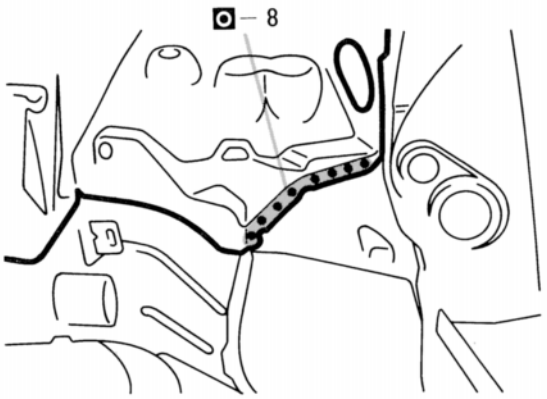

1. When temporarily installing the new parts, determine the installation position by the assembly mark.
2. Measurements must be accurate with the body dimension diagram, as this affects the front wheel alignment.
3. Temporarily install the front fender and hood, and check the fit.

mm	in.
15	0.59

FRONT SIDE MEMBER (CUT–P)

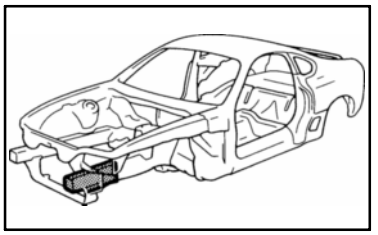

REMOVAL (With the radiator upper support and front crossmember removed.)

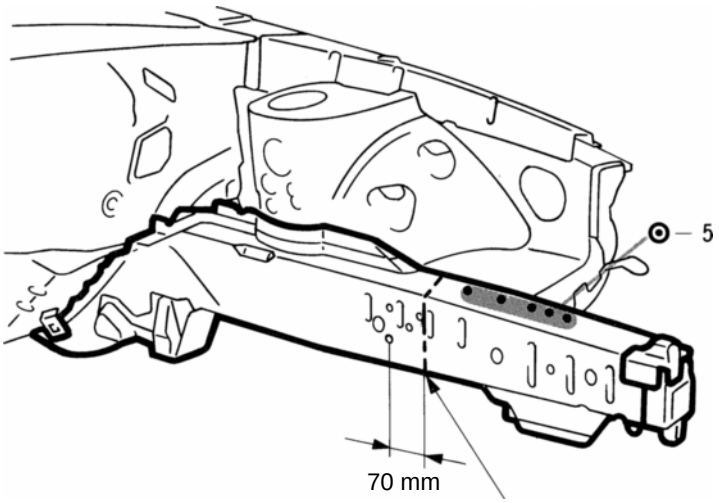

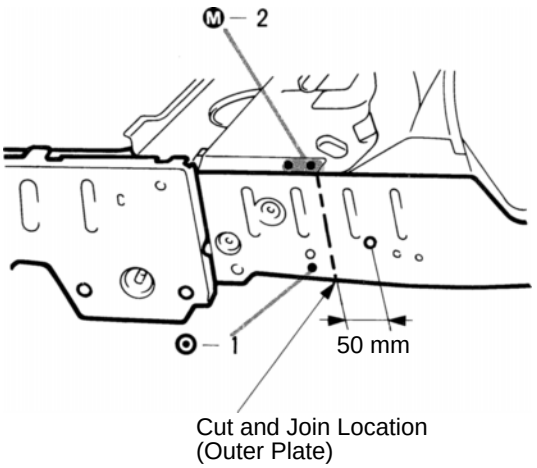

1. Cut and join the parts at the location shown above.

HINT: Shift the cut and join location of the outer plate, inner member and reinforcement.

mm	in.
50	1.97
70	2.76

INSTALLATION

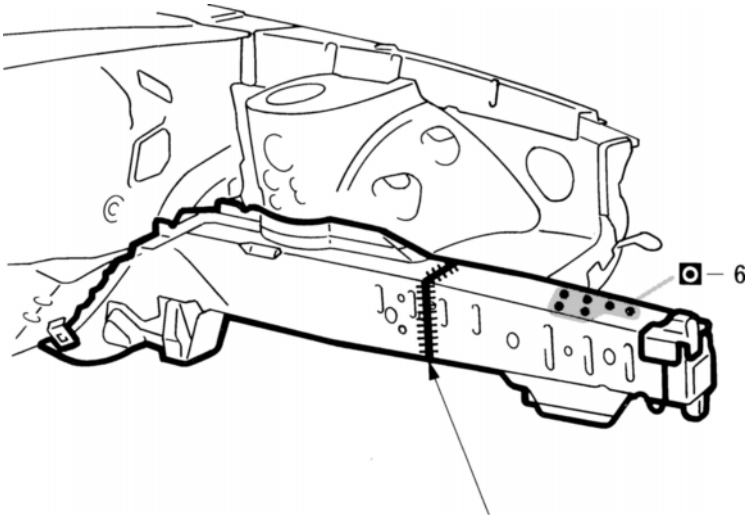

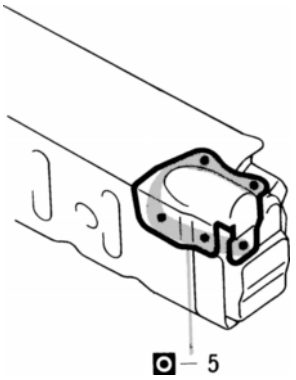

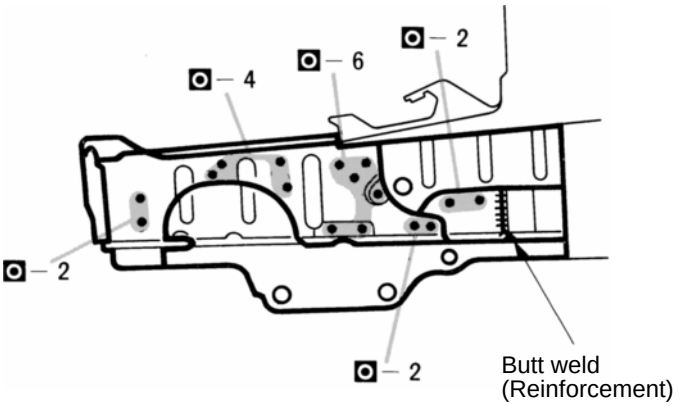

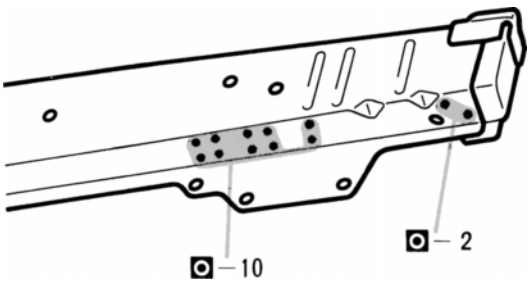

1. Temporarily install the new parts and measure each part in accordance with the body dimension diagram.
2. After butt welding the inner member and reinforcement, install the outer plate.

INSTALLATION (Cont'd)

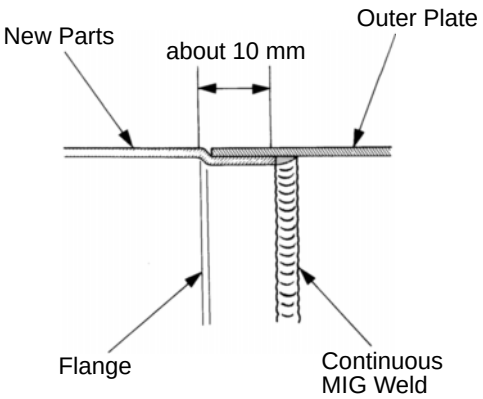

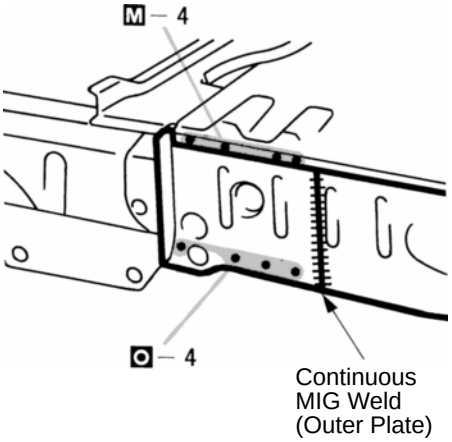

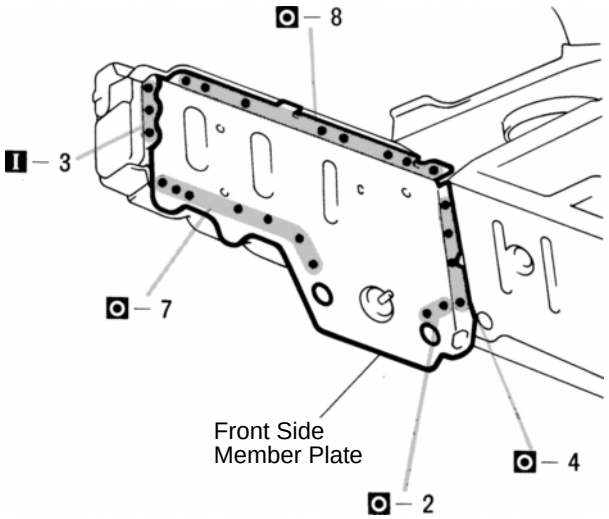

3. Provide a flange of about 10 mm (0.39 in.) on the new outer plate, then overlap it with the vehicle side panel and weld them with a continuous MIG weld to the edge.

mm	in.
10	0.39

FRONT SIDE MEMBER (ASSY)

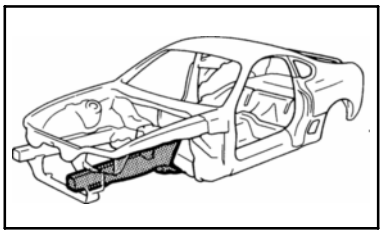

REMOVAL (With the front crossmember and front fender apron removed.)

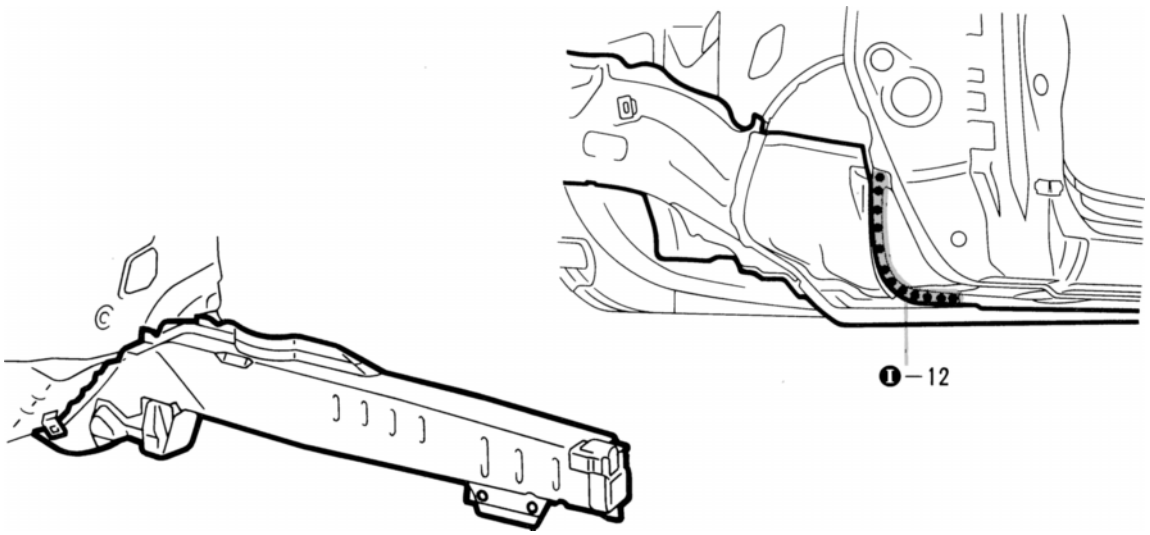

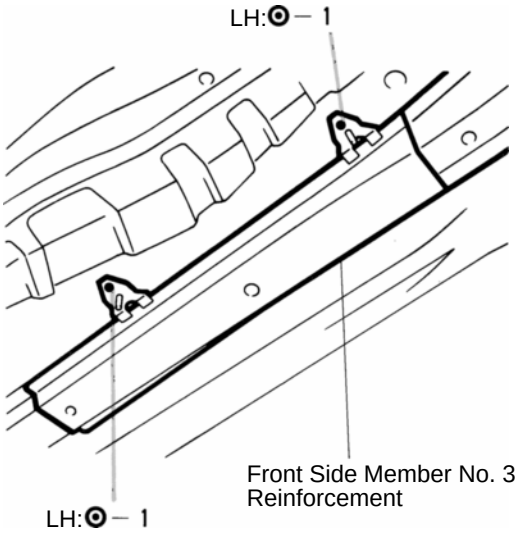

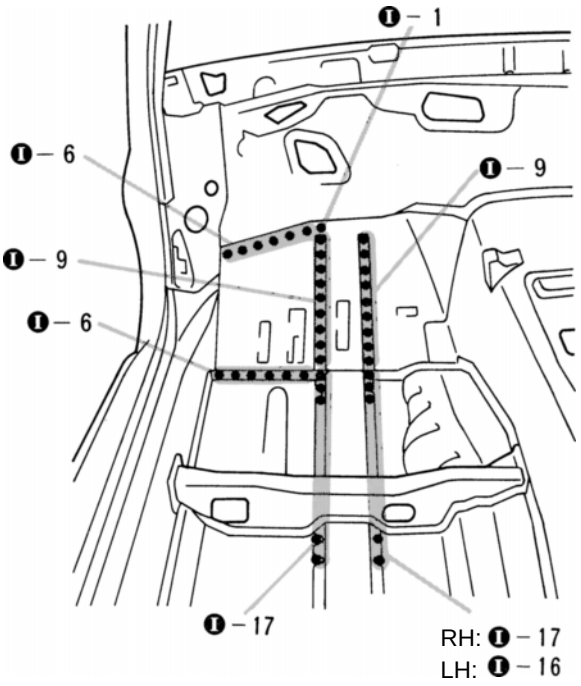

1. Replace the front side member No. 3 reinforcement at the same time.

INSTALLATION

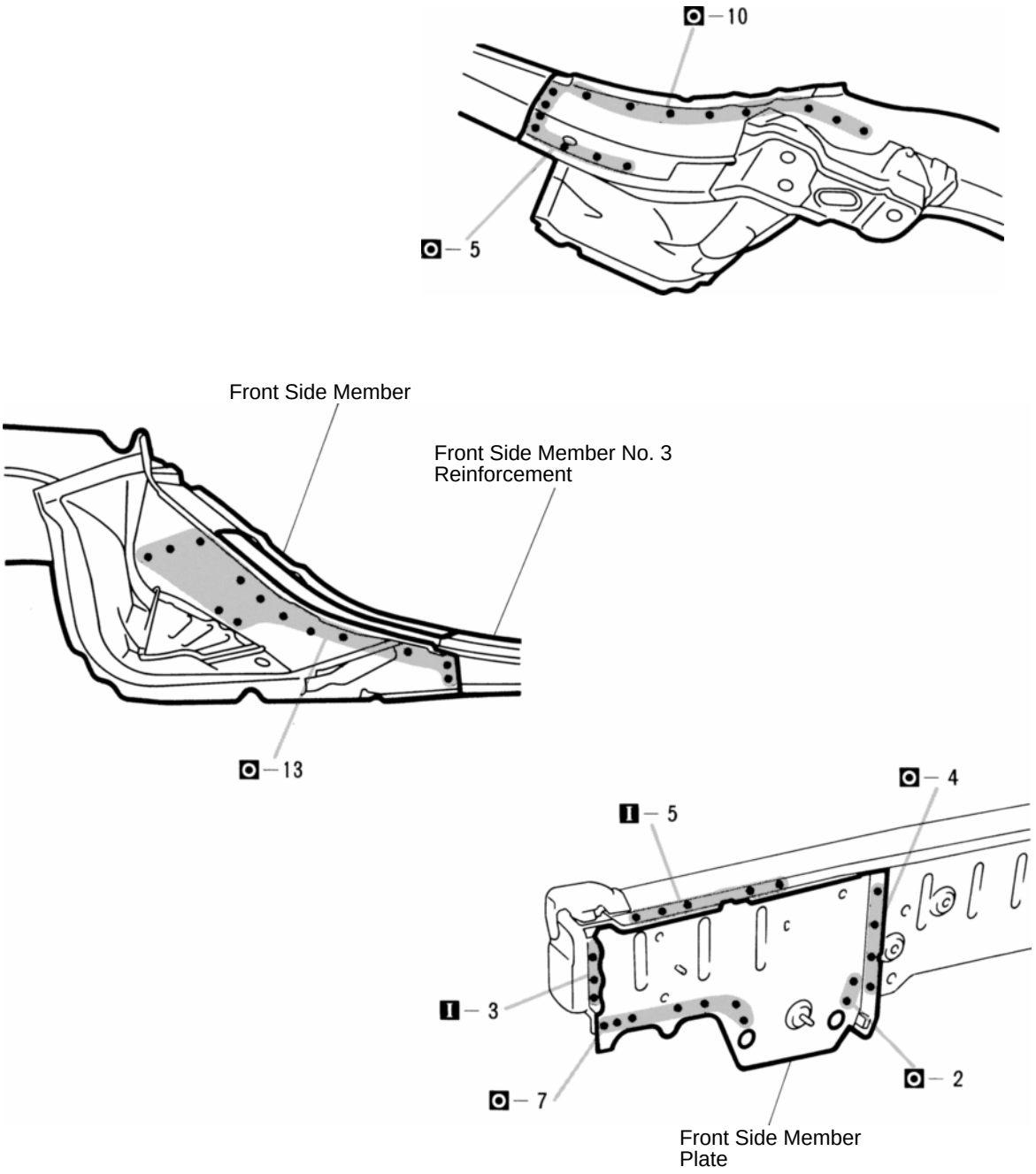

1. Before temporarily installing the new front side member, weld the front side member No. 3 reinforcement with standard points.

2. Temporarily install the new parts and measure each part in accordance with the body dimension diagram.

HINT: Make sure each measurement is correct, as this part affects the front wheel alignment.

INSTALLATION (Cont'd)

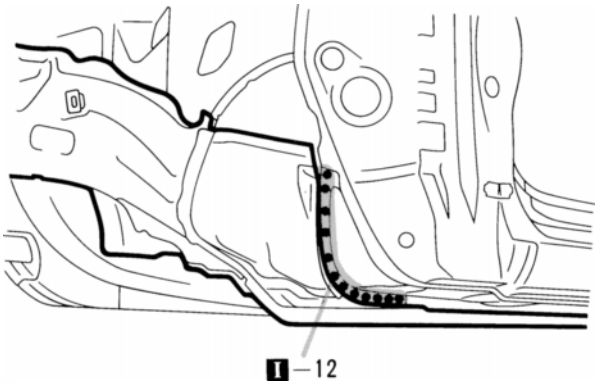

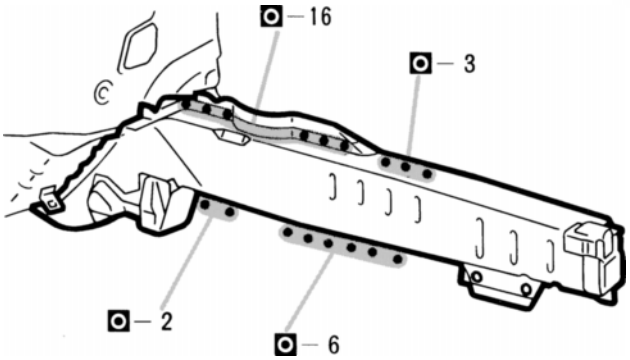

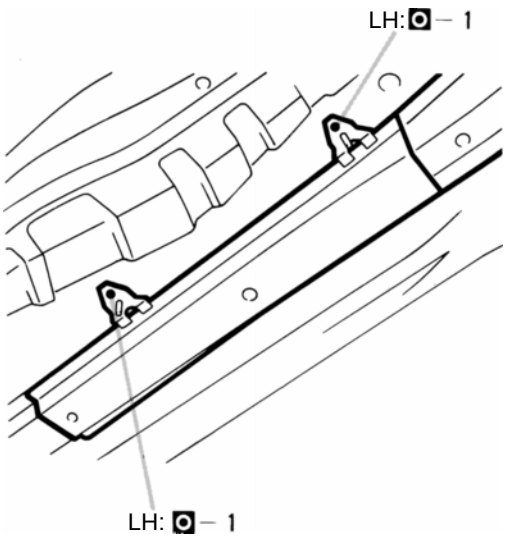

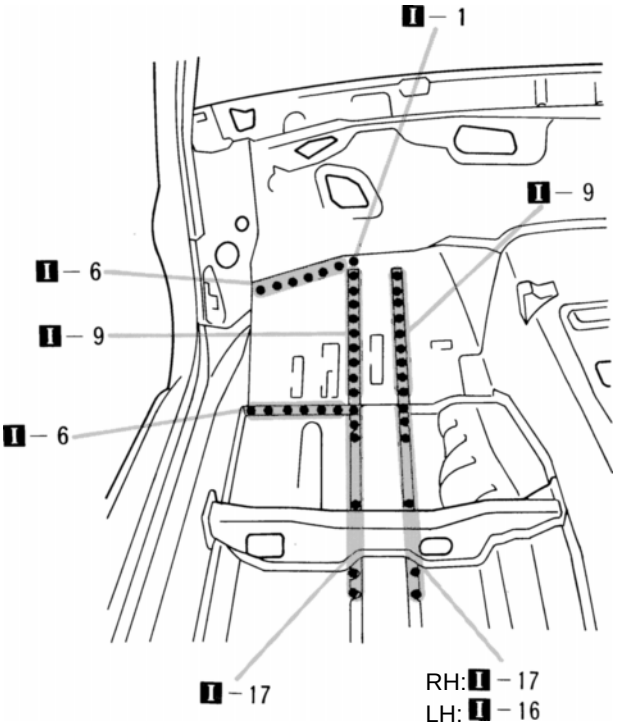

COWL TOP SIDE PANEL (ASSY)

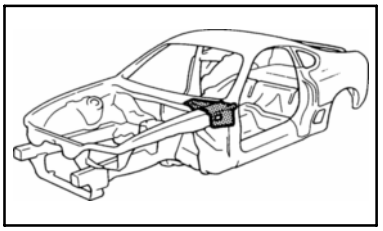

REMOVAL

(Right Side)

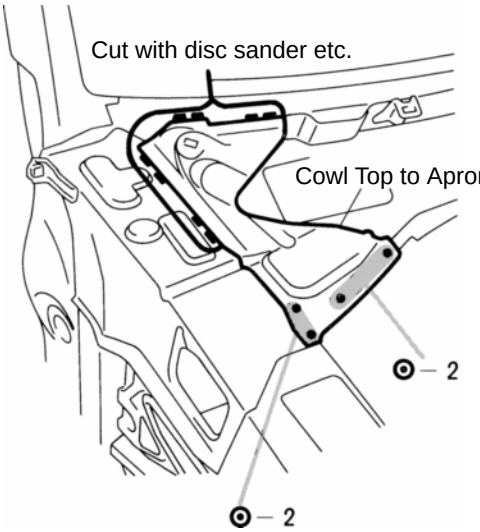

(Left Side)

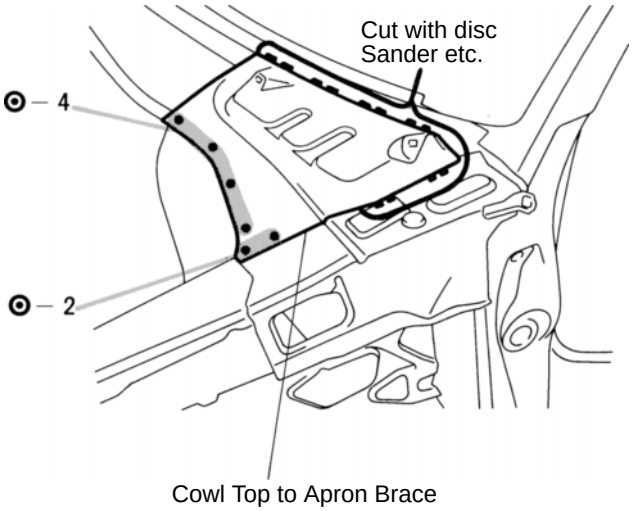

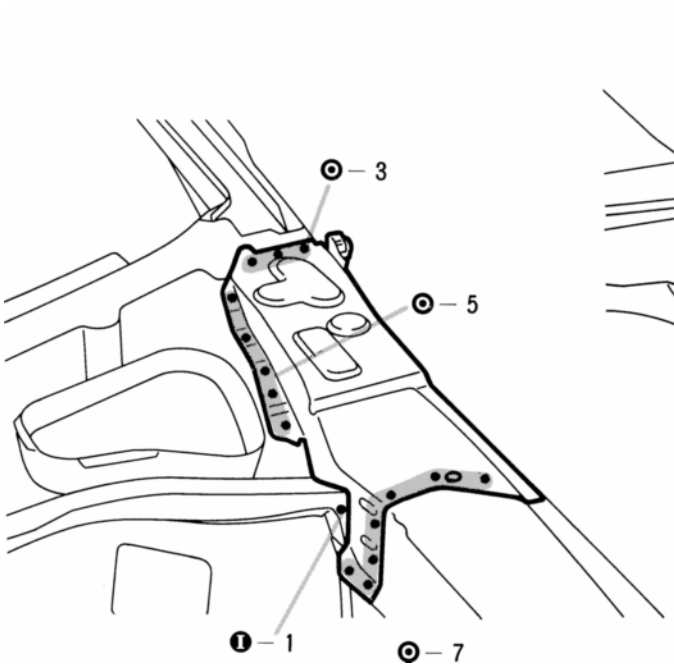

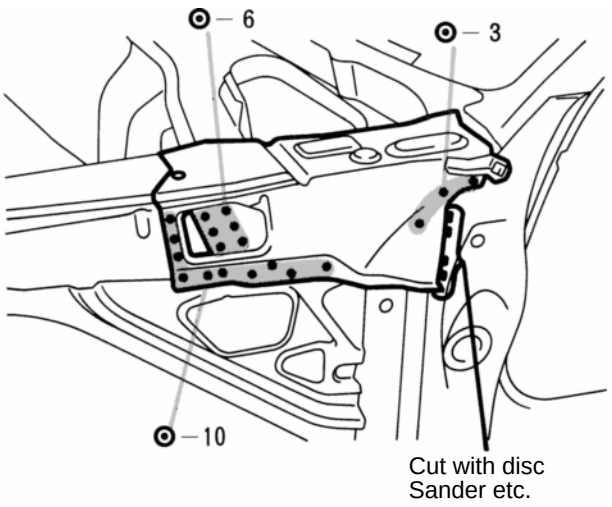

1. After removing the cowl top to apron brace, remove the cowl top side panel.

INSTALLATION

(Right Side)

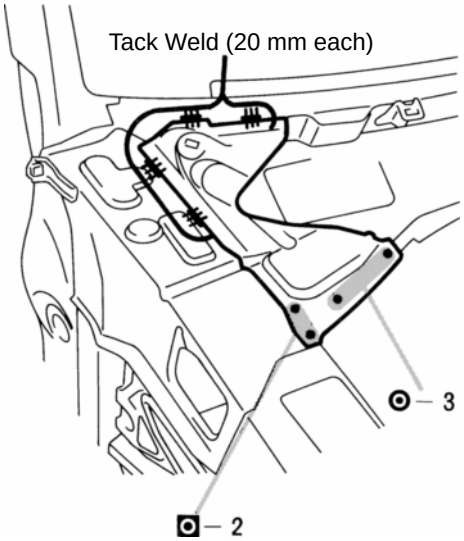

(Left Side)

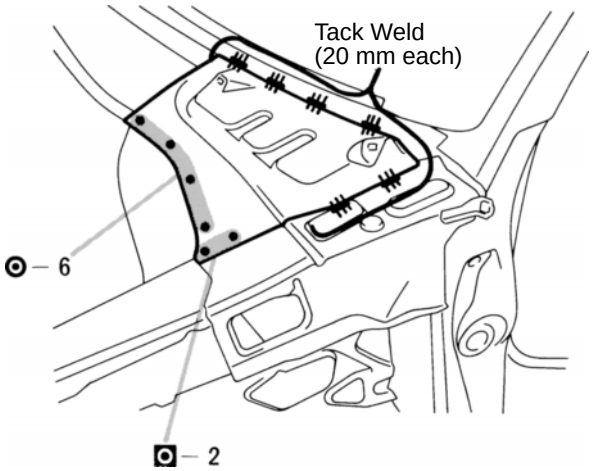

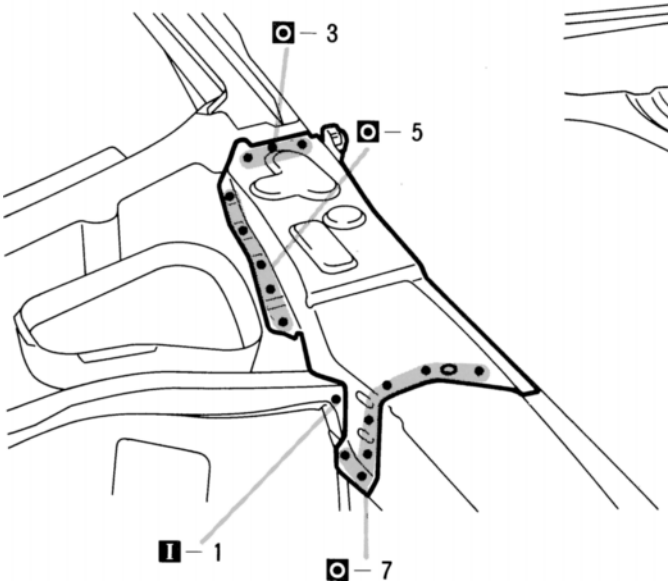

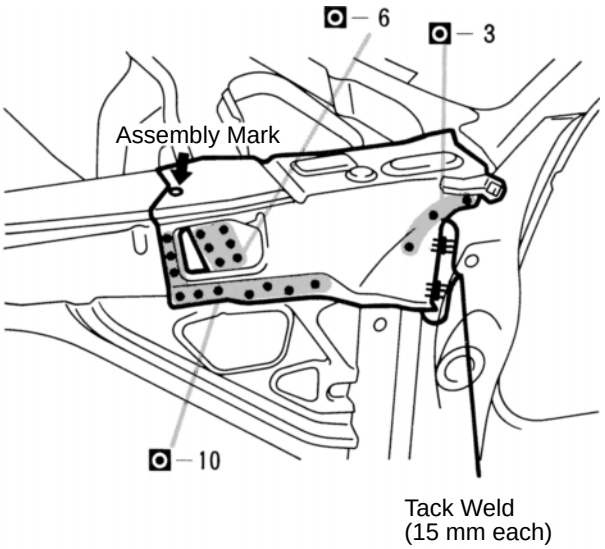

1. When temporarily installing the new parts, determine the installation position by the assembly mark. Then, measure each part in accordance with the body dimension diagram.

mm	in.
15	0.59
20	0.79

FRONT BODY PILLAR (CUT): Normal Roof

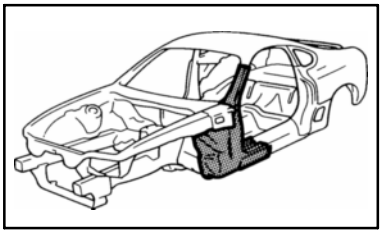

REMOVAL (With the cowl top side panel removed.)

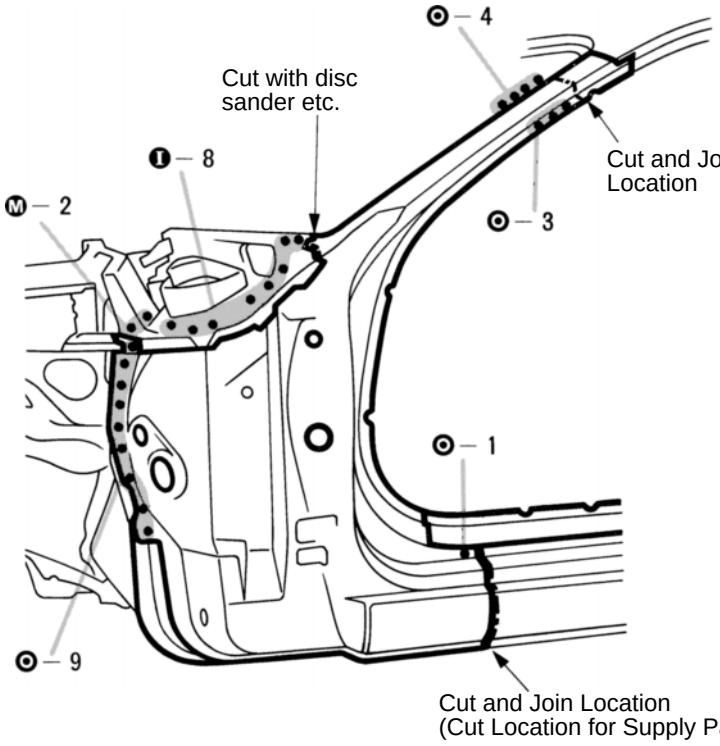

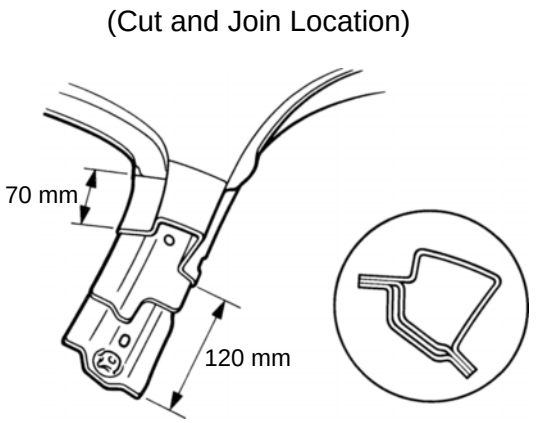

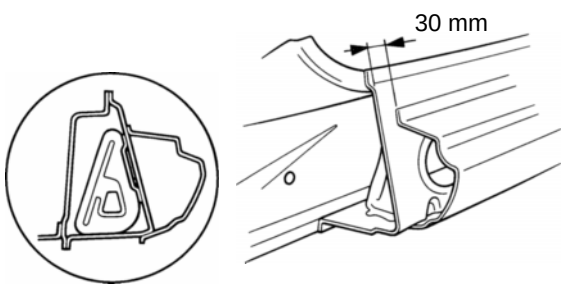

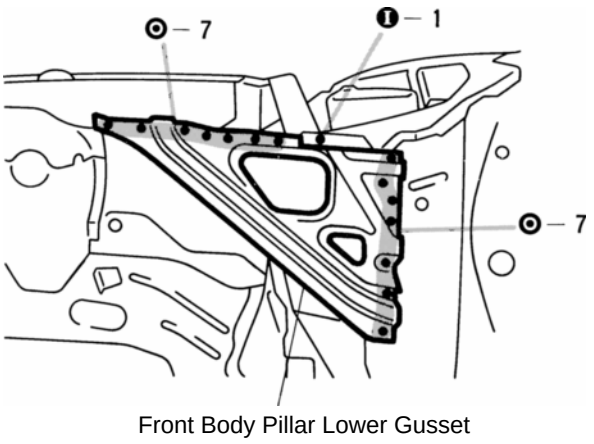

1. Cut and join the parts at the locations shown above.

HINT:

1) Cut the front body pillar outer panel at a 120 mm (4.72in.) offset from the inner panel as shown above right.

2) The cut location of the rocker panel reinforcement is made 30mm (1.18in) to the front of the rocker panel inner cut location, as shown.

2. After removing the front body pillar lower gusset, remove the front body pillar.

mm	in.
30	1.18
70	2.76
120	4.72

REMOVAL (Cont'd)

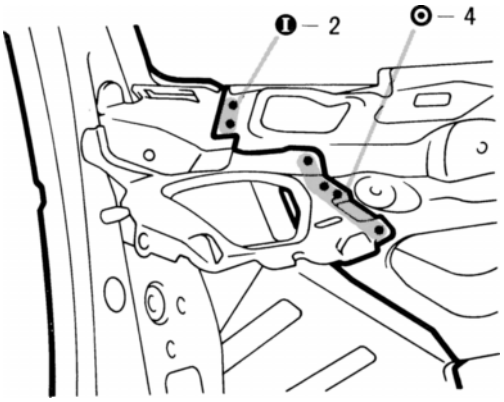

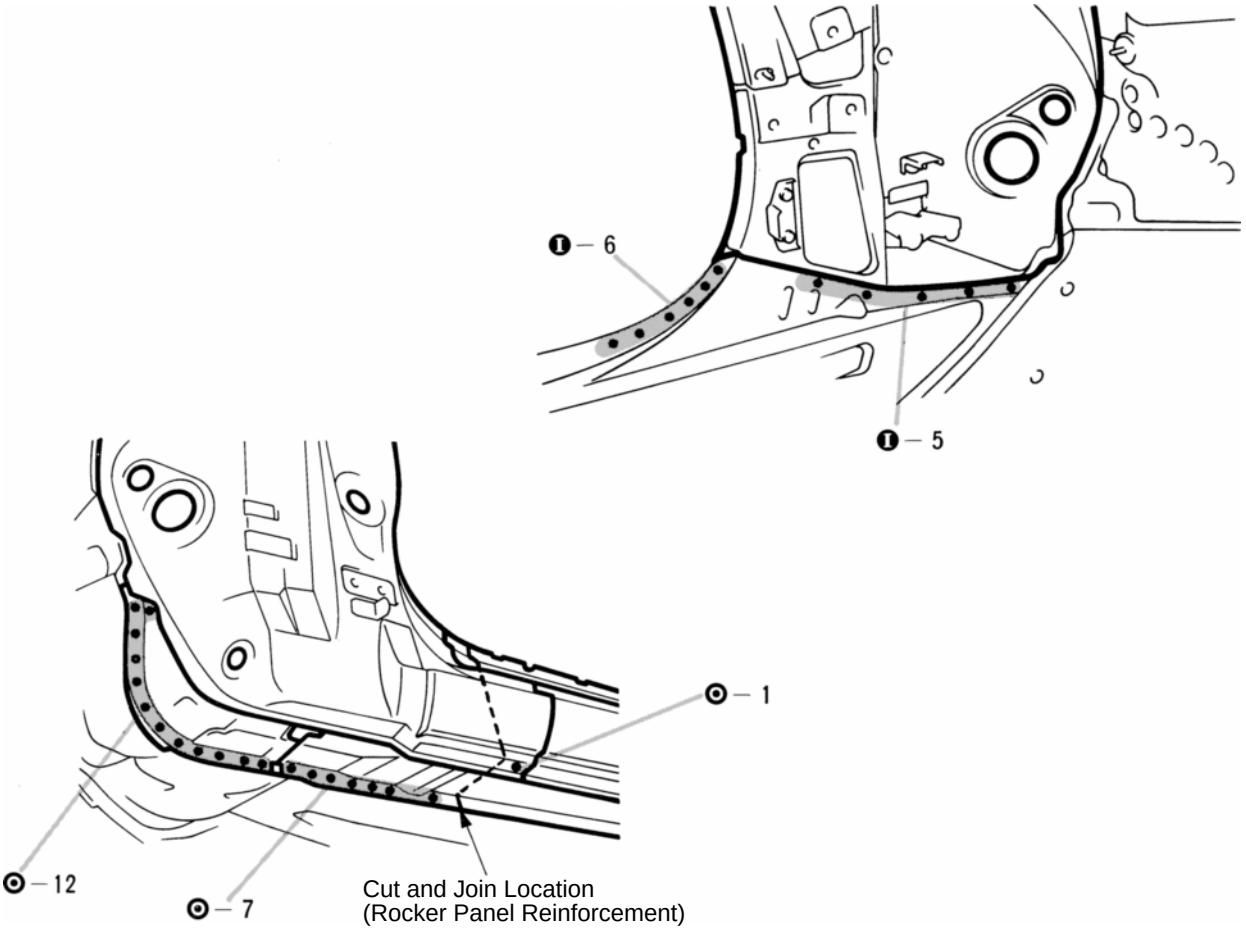

INSTALLATION

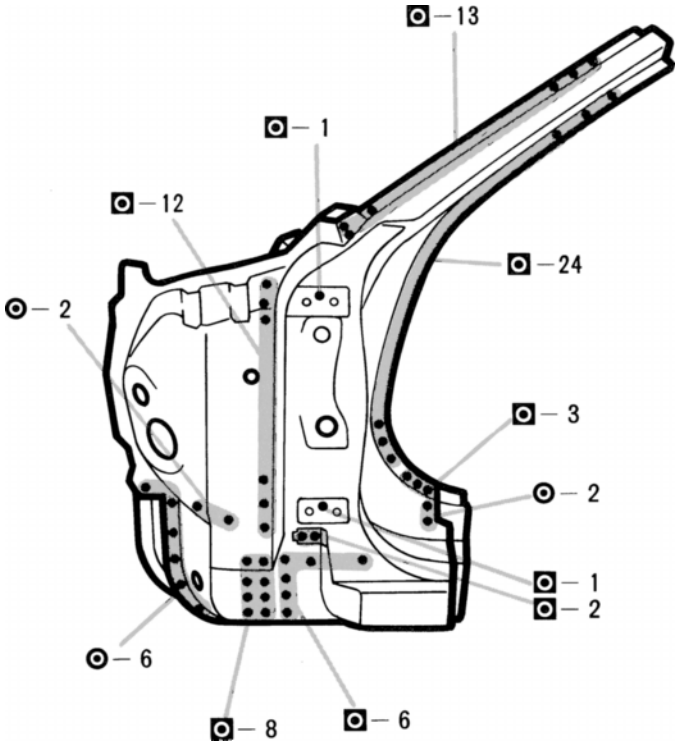

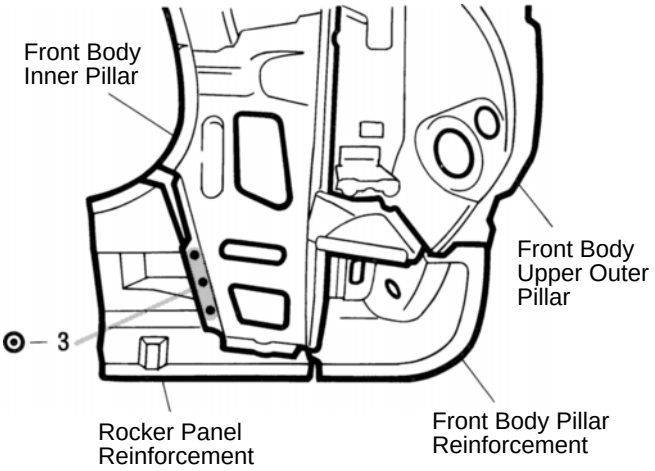

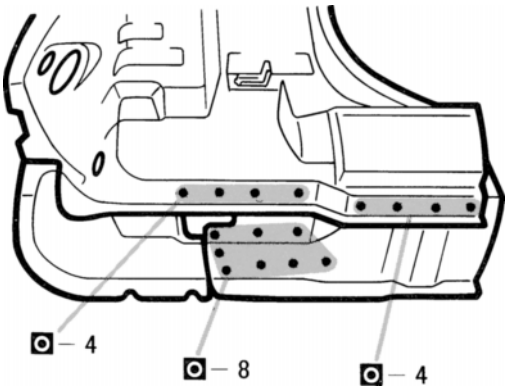

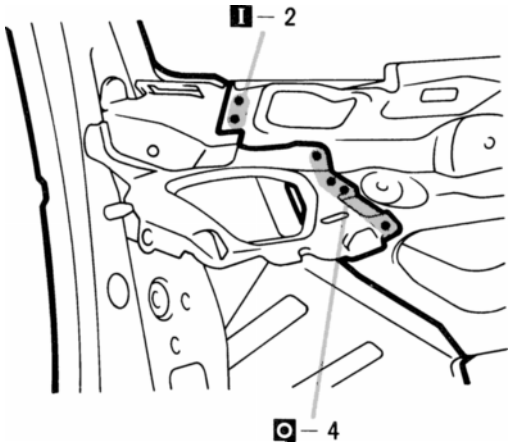

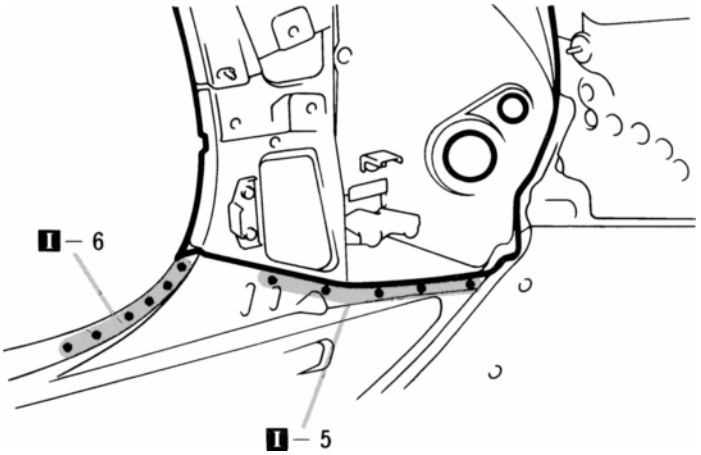

1. Before installing the outer panel inner reinforcement, inner pillar and rocker panel reinforcement, assemble the parts and weld them according to the standard number of welds as shown above.
2. Temporarily install the new parts and measure each part in accordance with the body dimension diagram.

INSTALLATION (Cont'd)

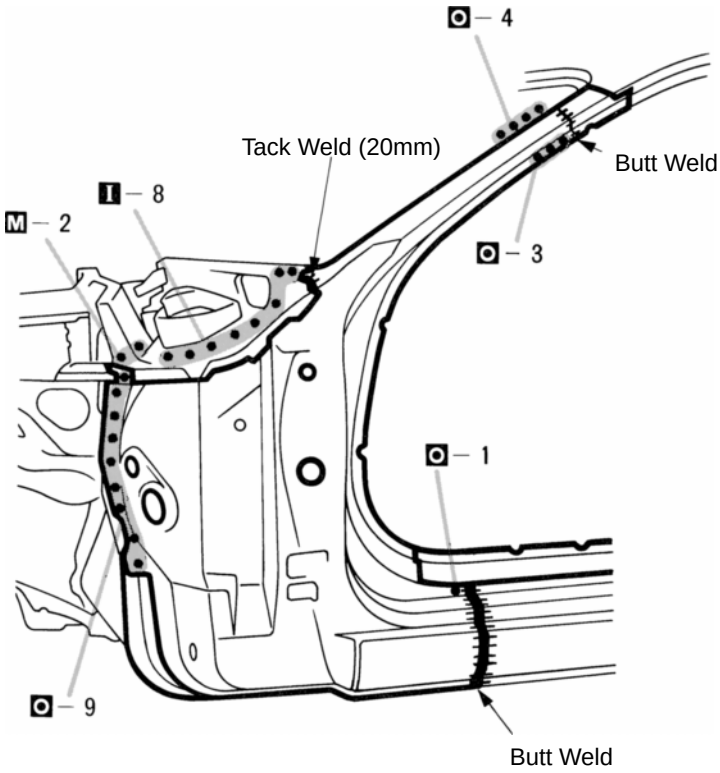

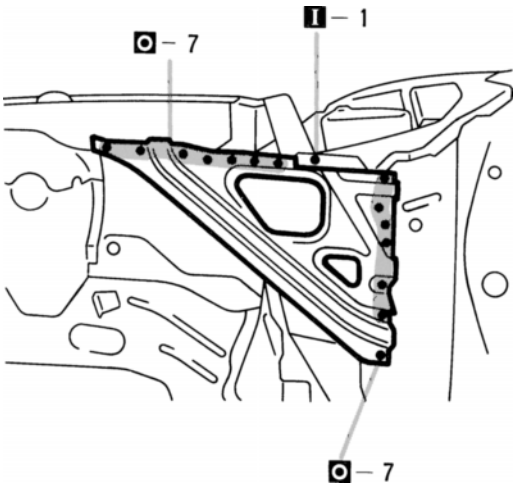

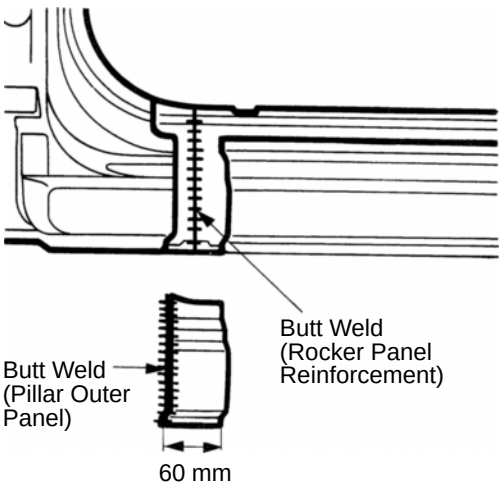

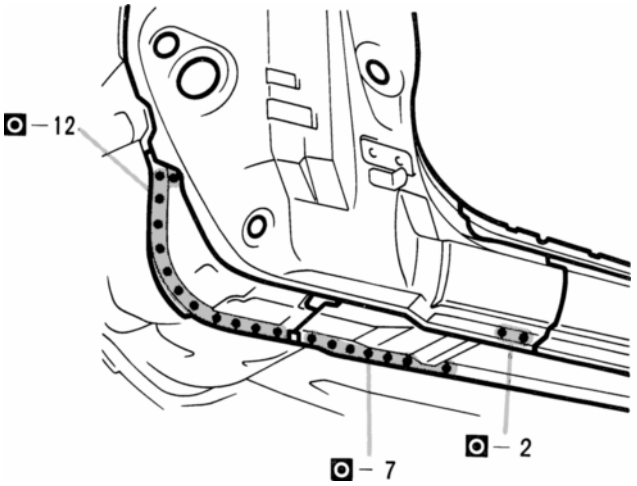

mm	in.
20	0.79
60	2.36

3. Before welding the new parts, check the fit of the front door, front fender and windshield glass.
4. A 60mm (2.36in.) wide access hole should be made in the rocker outer panel. After butt welding the rocker panel reinforcement reattach the rocker outer panel by welding.
5. After installing the new parts, apply foamed material.

HINT: For the formed material application areas, refer to page AP–4.

FRONT BODY PILLAR (CUT): SPORT ROOF

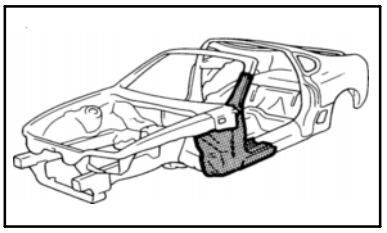

REMOVAL (With the cowl top side panel removed.)

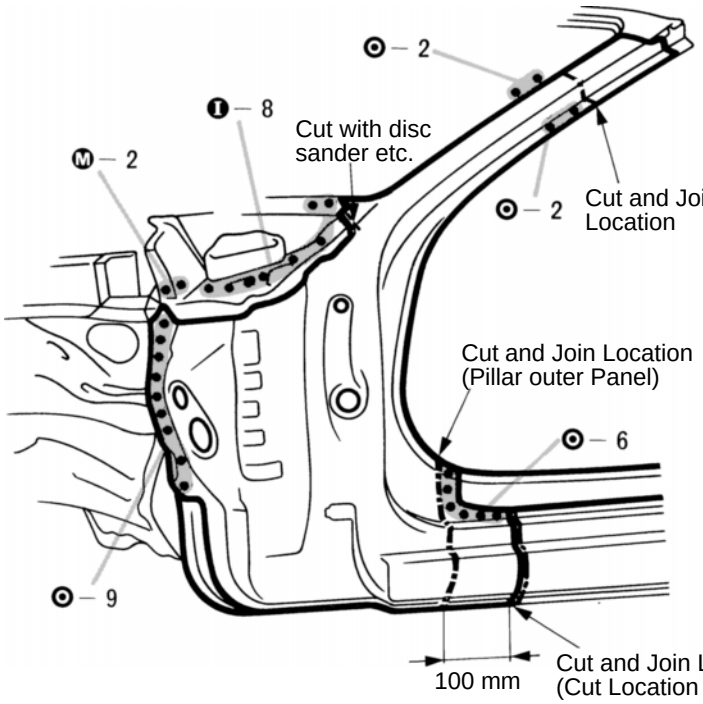

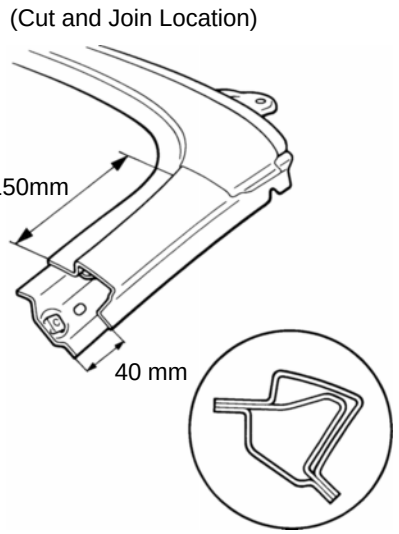

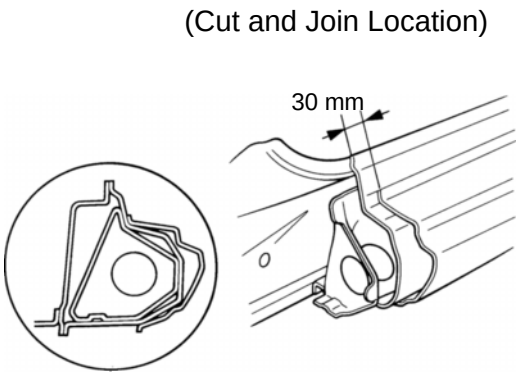

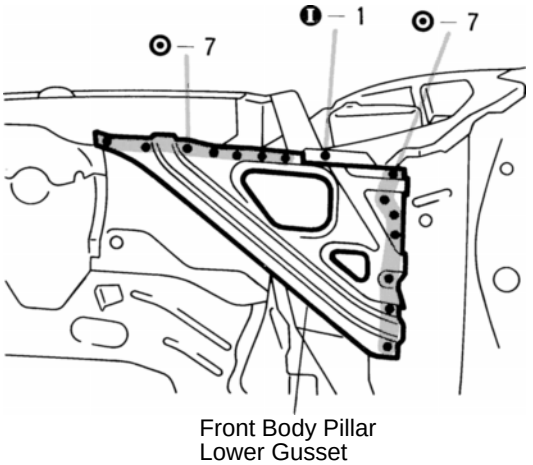

1. Cut and join the part at the locations shown above.

HINT:

1) Cut the front body pillar outer panel at a 40 mm (1.57in.) offset from the inner panel as shown.

2) The cut location of the rocker panel reinforcement is made 30 mm (1.18 in.) to the front of the rocker outer panel cut location, as shown.

2. The rocker panel reinforcement cut location is made 100mm (3.94 in.) to the front of the outer panel cut location, avoid damaging the No. 4 reinforcement.

mm	in.
30	1.18
40	1.57
100	3.94
150	5.91

REMOVAL (Cont'd)

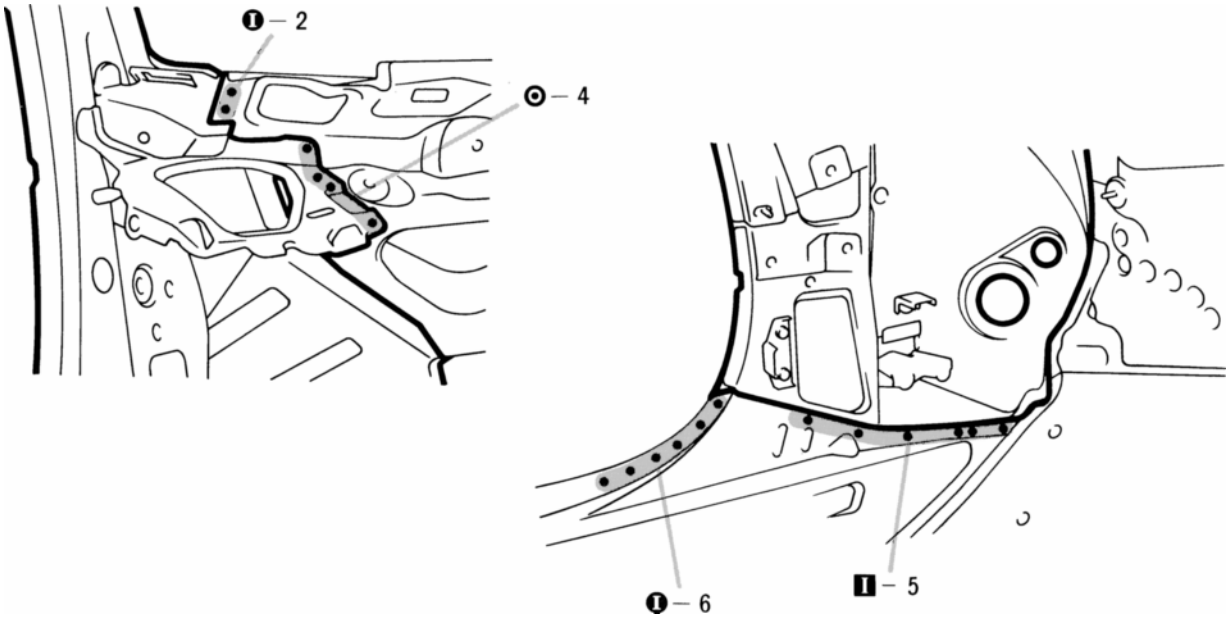

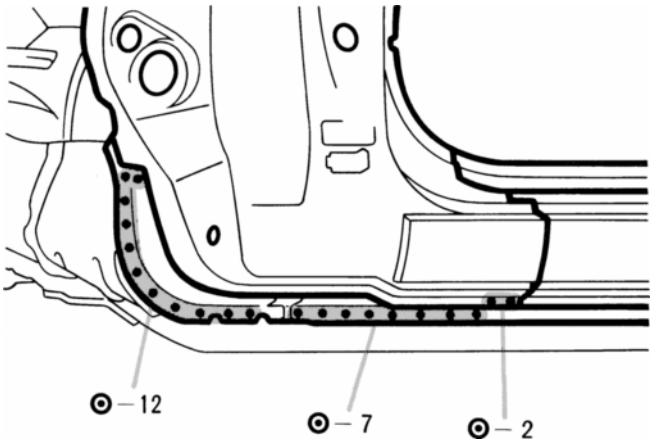

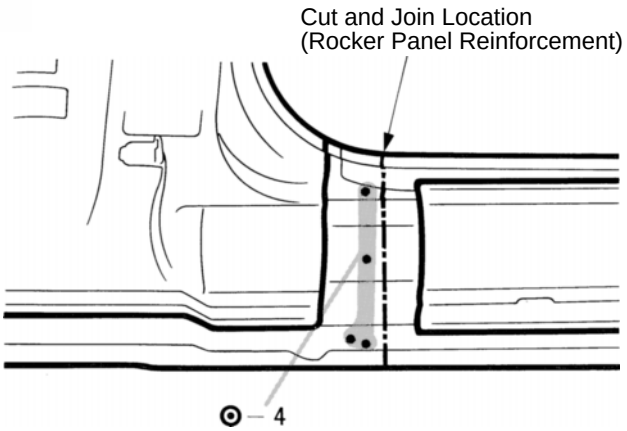

3. After removing the front body pillar lower gusset, remove the front body pillar.

INSTALLATION

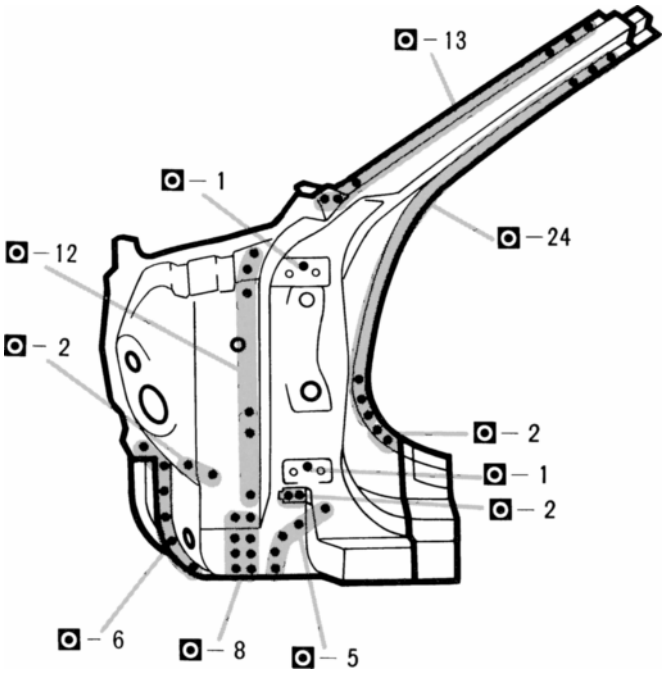

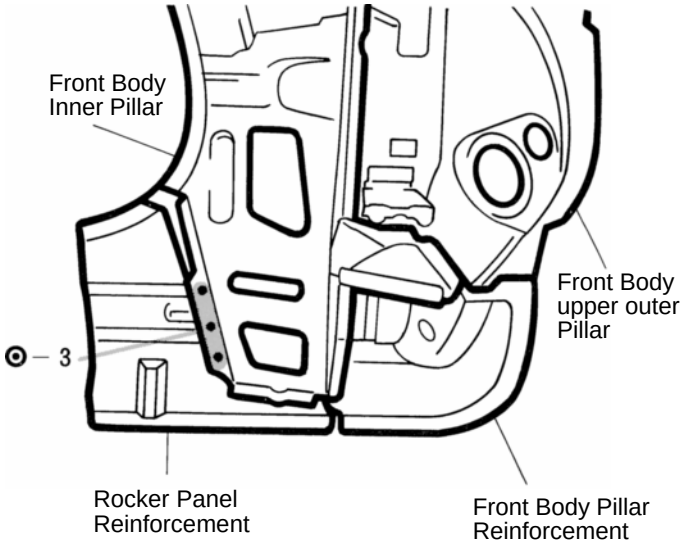

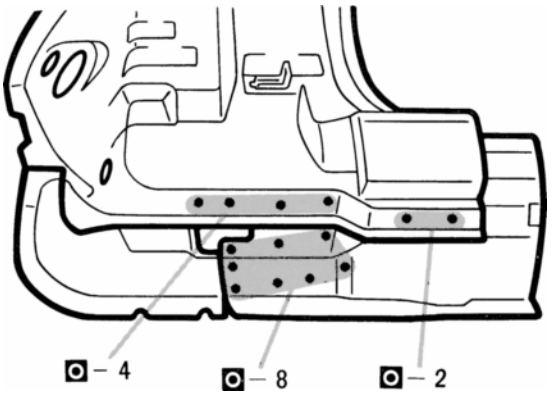

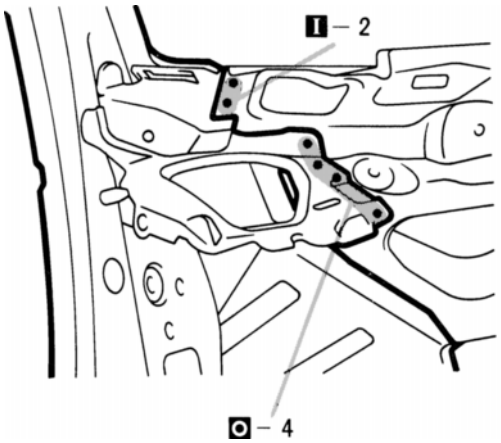

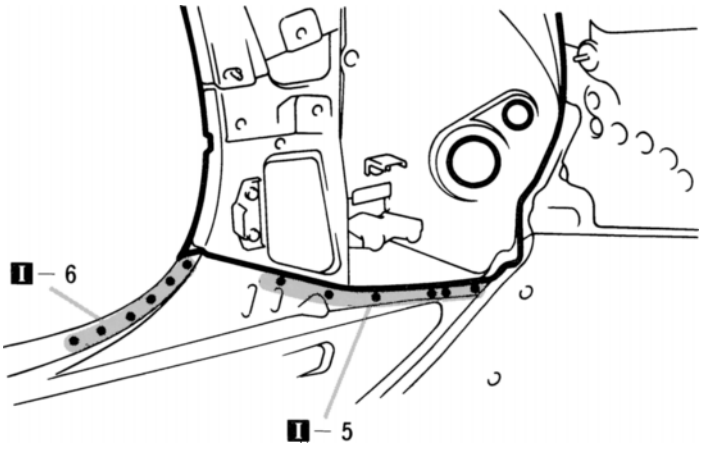

1. Before installing the outer panel, inner reinforcement, inner pillar and rocker panel reinforcement, assemble the parts and weld them according to the standard number of welds as shown above.
2. Temporarily instal the new parts and measure each part in accordance with the body dimension diagram.

INSTALLATION (Cont'd)

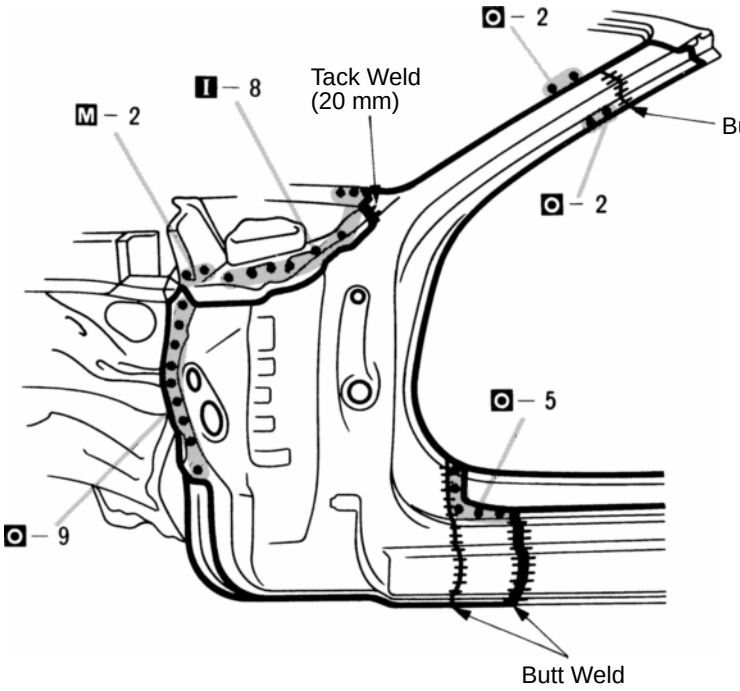

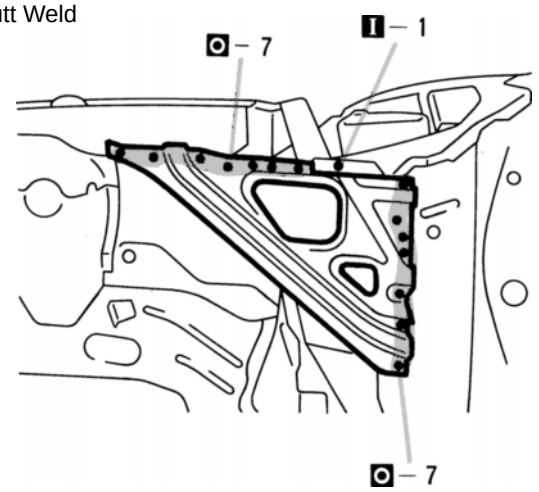

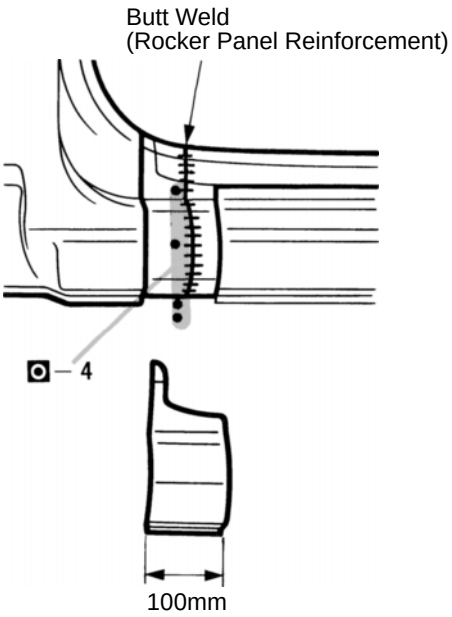

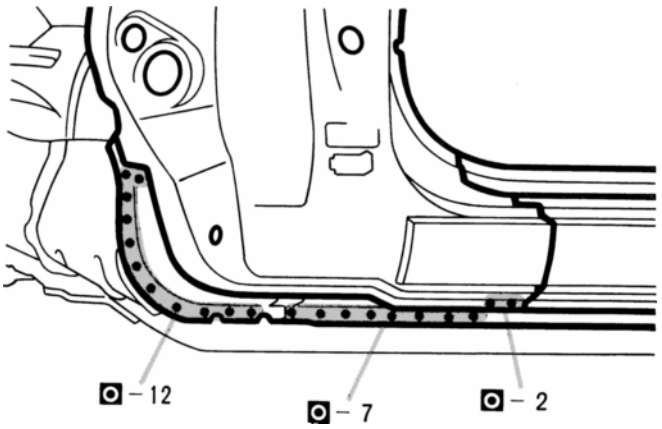

mm	in.
20	0.79
100	3.94

3. Before welding the new parts, check the fit of the front door, front fender and windshield glass.
4. A 100mm (3.94 in.) wide access hole should be made in the rocker outer panel. After butt welding the rocker panel reinforcement, reattach the rocker outer panel by welding.
5. After installing the new parts, apply foamed material.

HINT: For the foamed material application areas, refer to page AP–4.

FRONT DOOR OUTER PANEL (ASSY)

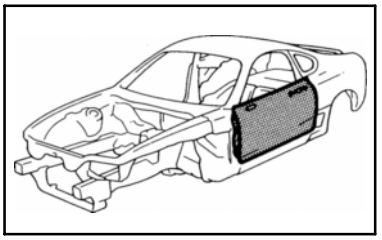

REMOVAL

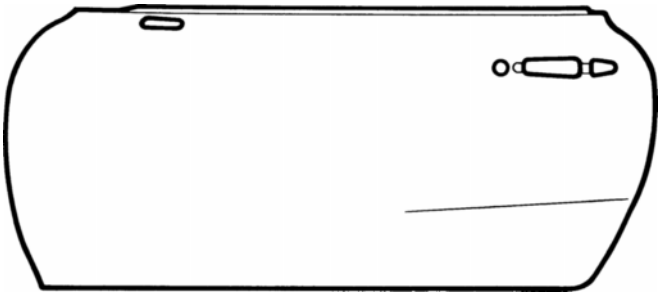

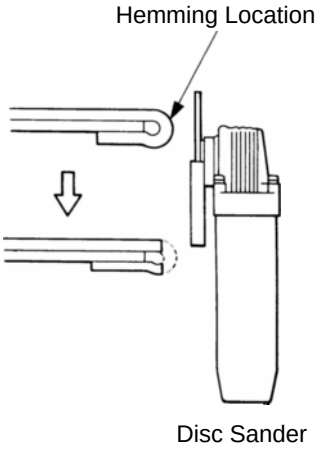

1. After grinding off the hemming location, remove the outer panel.

INSTALLATION

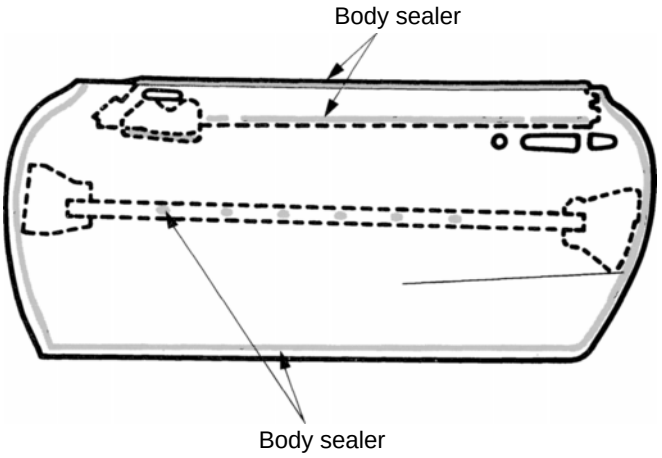

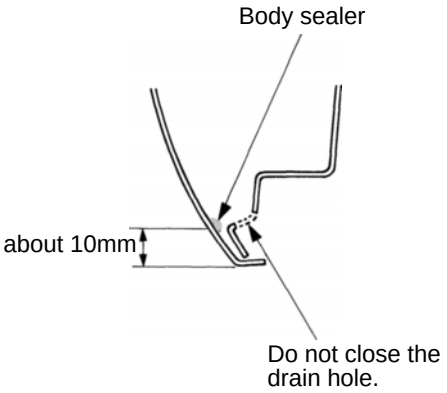

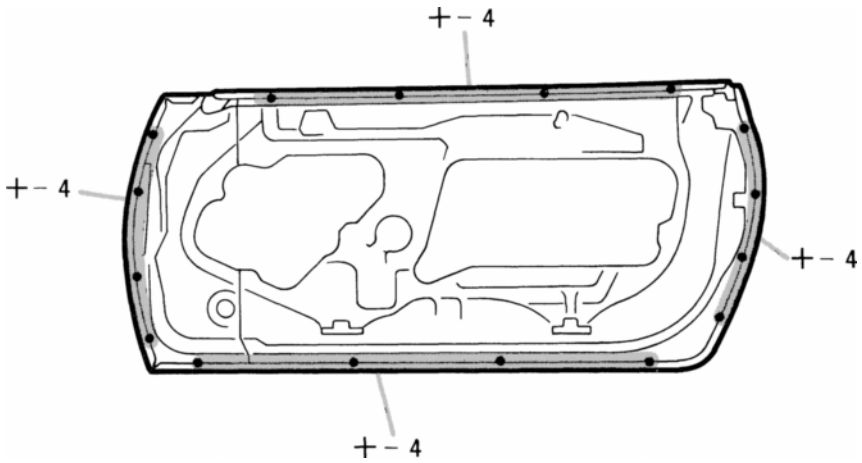

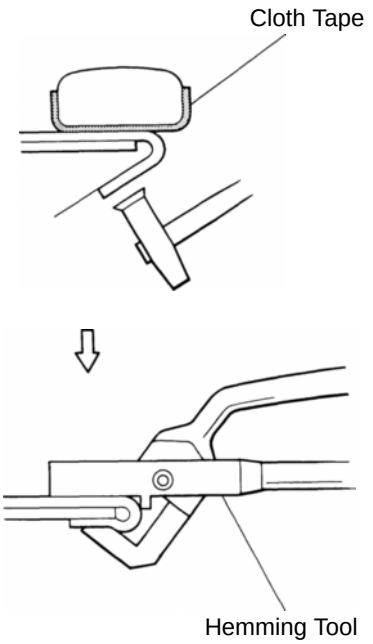

mm	in.
10	0.39

1. Before temporarily installing the new parts, apply body sealer to the reinforcement, side impact protection beam and back side of the new parts.

HINT:

1) Apply just enough sealer for the reinforcement and side impact beam to touch the new panel. Apply sealer evenly around the flange area, about 10 mm (0.39 in.) from the edge, as shown.

2) For other sealing points, refer to section AR.

2. Bend the flange hem about 30˚ with a hammer and dolly, then fasten tightly with a hemming tool.

HINT:

1) Perform hemming in three steps, being careful not to warp the panel.

2) If a hemming tool cannot be used, hem with a hammer and dolly.

ROCKER OUTER PANEL (CUT)

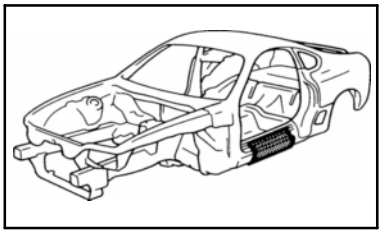

REMOVAL

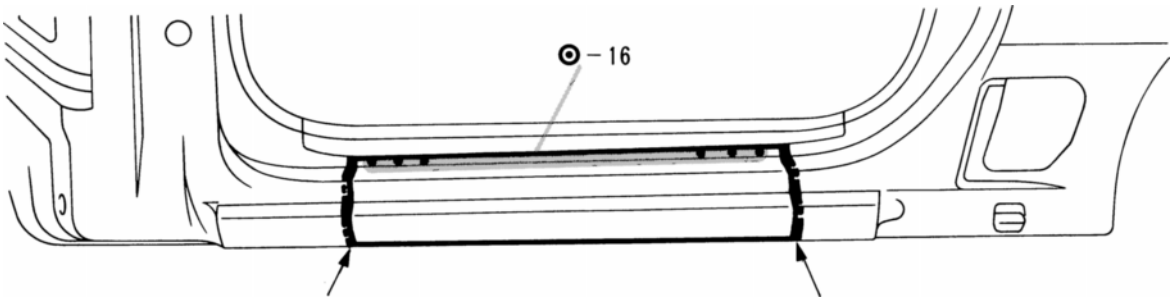

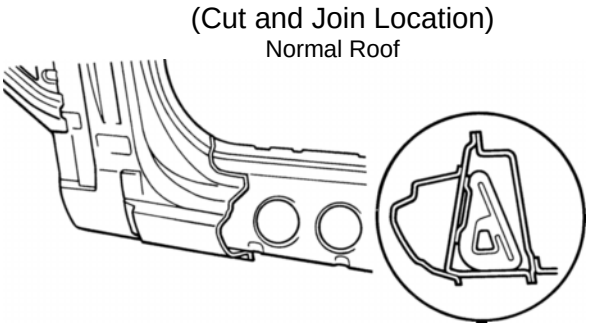

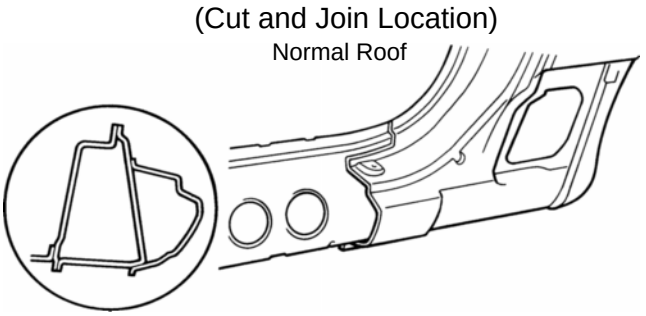

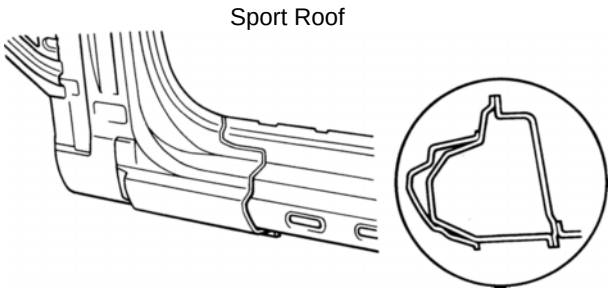

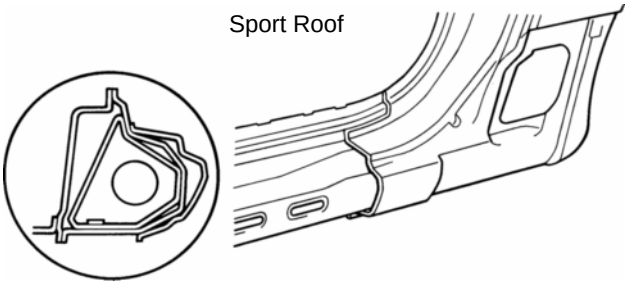

1. Cut and join the parts at the location as shown above.

HINT:

1) Be careful to cut so the rocker panel reinforcement is not damaged.

INSTALLATION

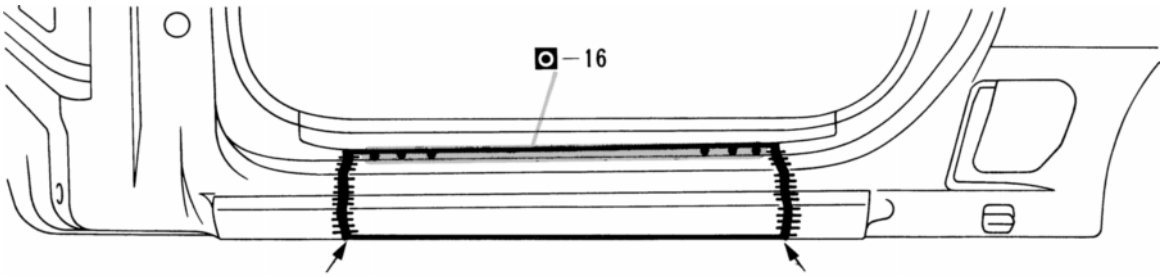

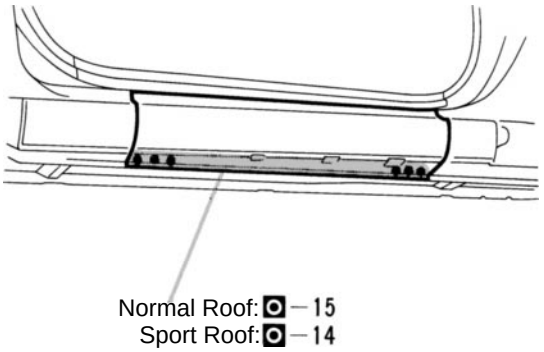

1. Temporarily install the new parts and check the fit of the front door.

QUARTER PANEL (CUT)

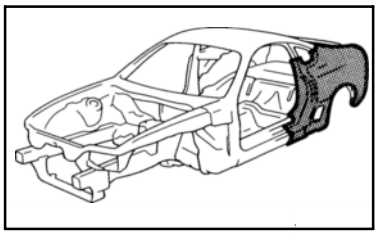

REMOVAL

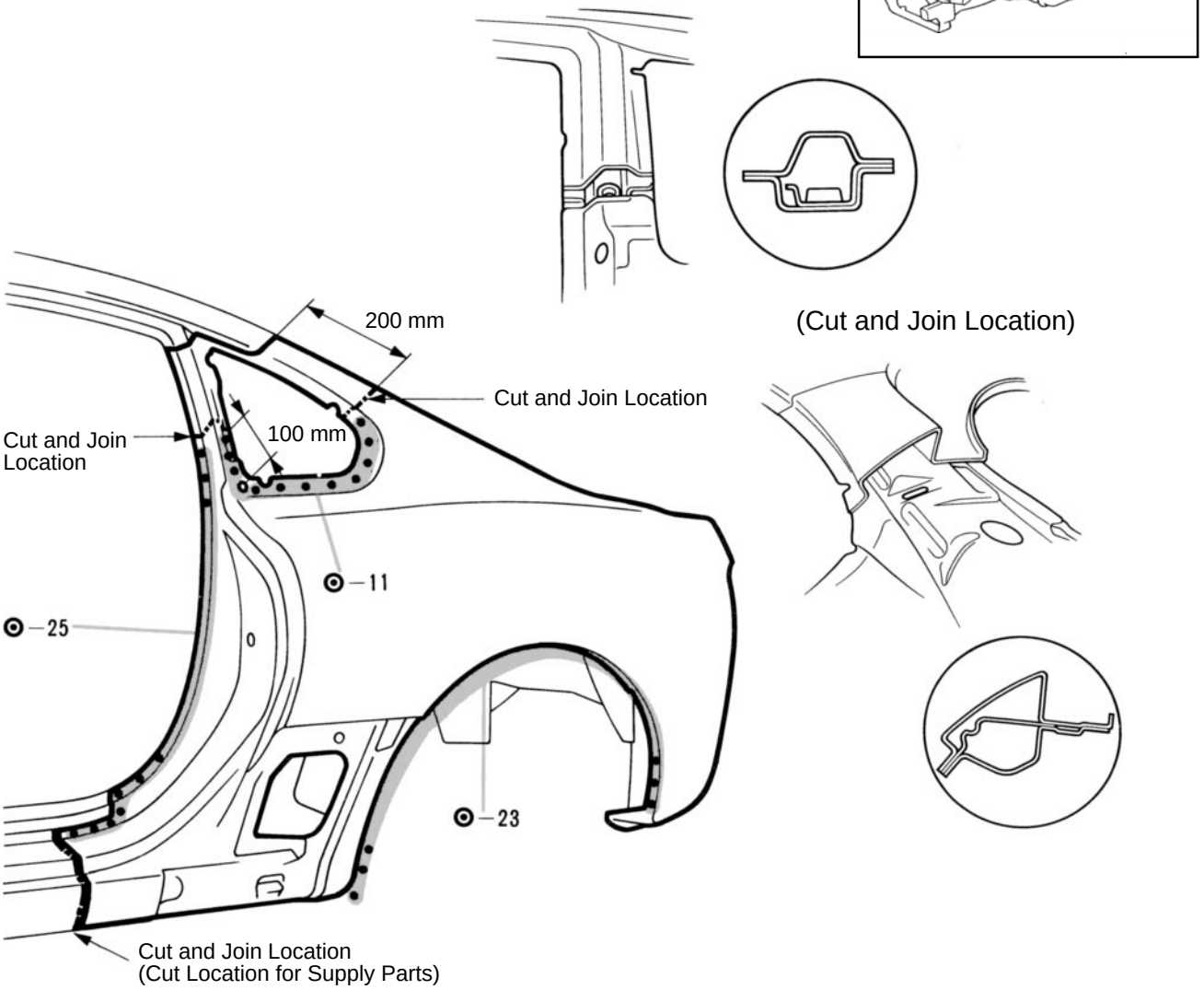

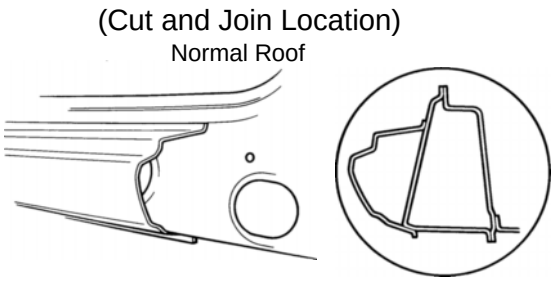

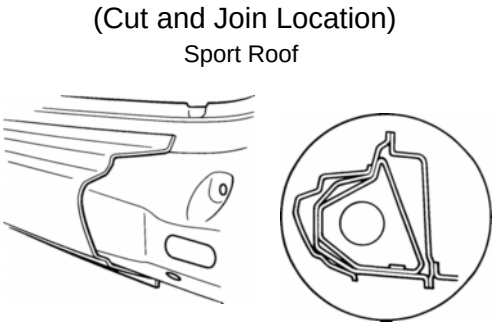

1. Cut and join the parts at the location shown above.

mm	in.
100	3.94
200	7.87

REMOVAL (Cont'd)

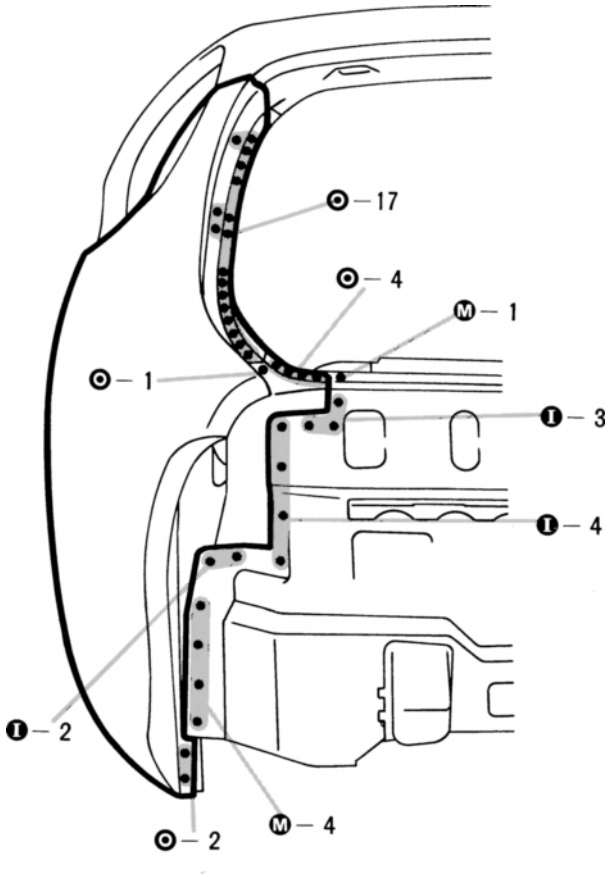

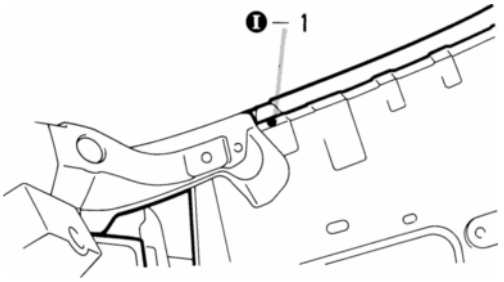

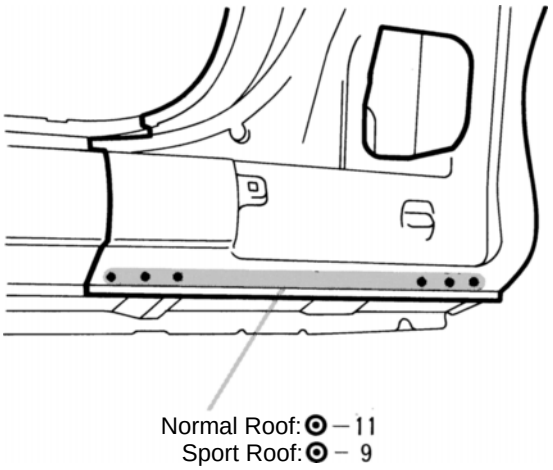

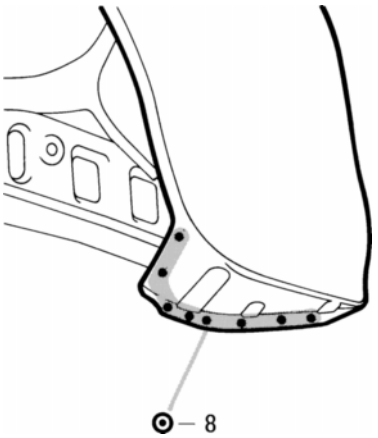

INSTALLATION

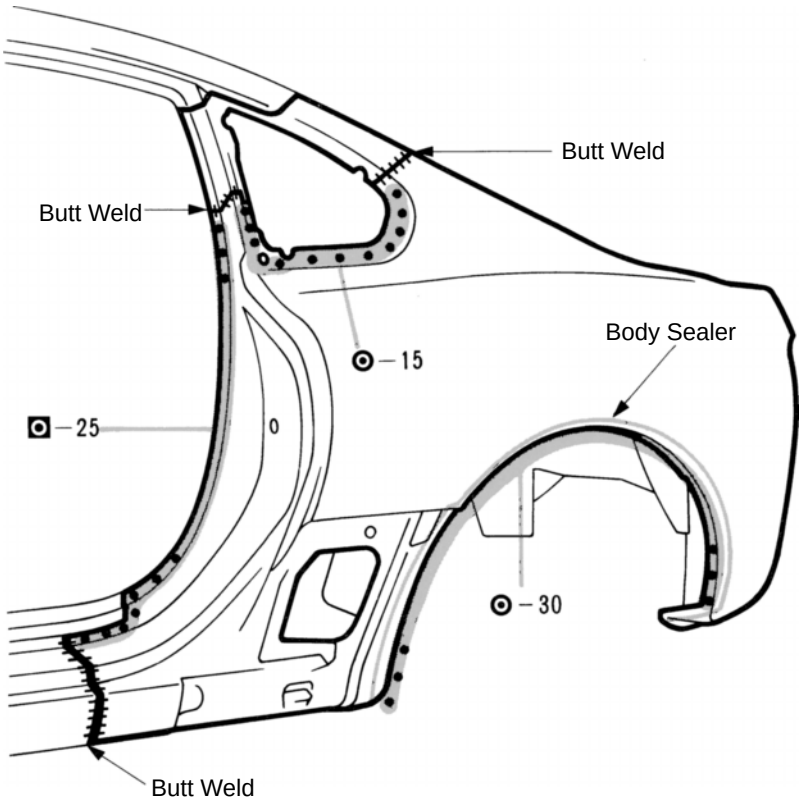

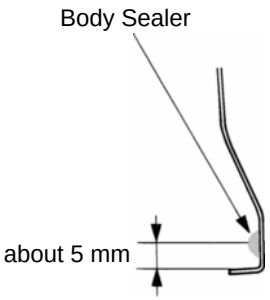

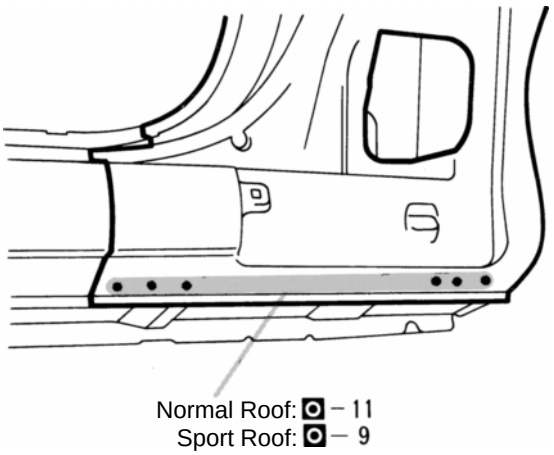

mm	in.
5	0.20

1. Before temporarily installing the new parts, apply body sealer to the wheel arch.

HINT:

1) Apply body sealer about 5 mm (0.20 in.) from the flange, avoiding any oozing.
2) Apply sealer evenly, about 3 – 4 mm (0.12 – 0.16 in.) in diameter.
3) For other sealing points, refer to section AR.

2. Temporarily install the new parts and check the fit of the front door, back door and rear combination lamp.
3. Apply foamed material to the pillar section.

HINT: For the foamed material application areas, refer to page AP–4.

INSTALLATION (Cont'd)

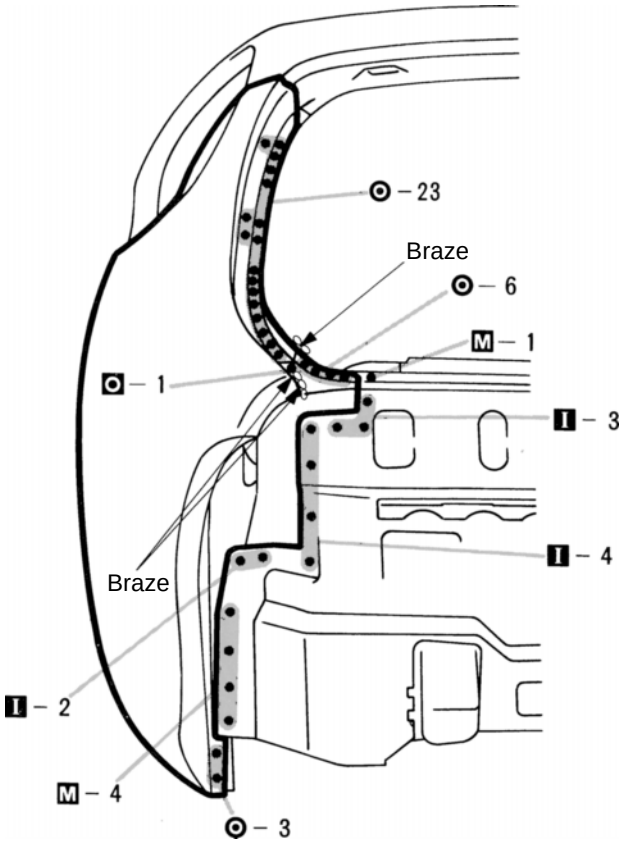

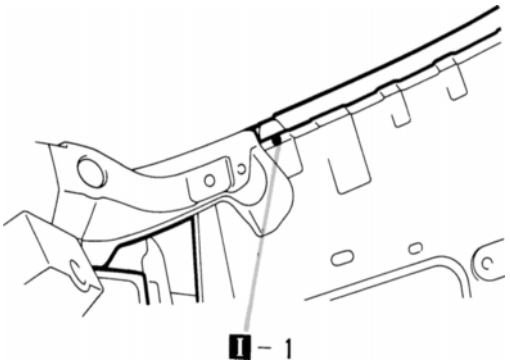

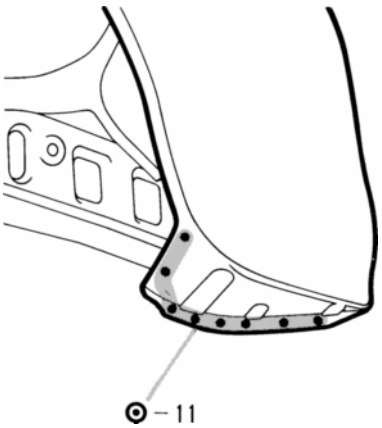

QUARTER PANEL (CUT–P)

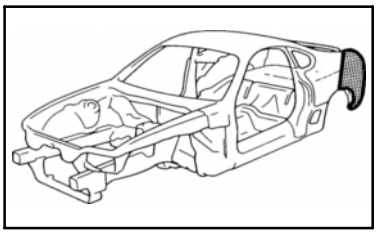

REMOVAL

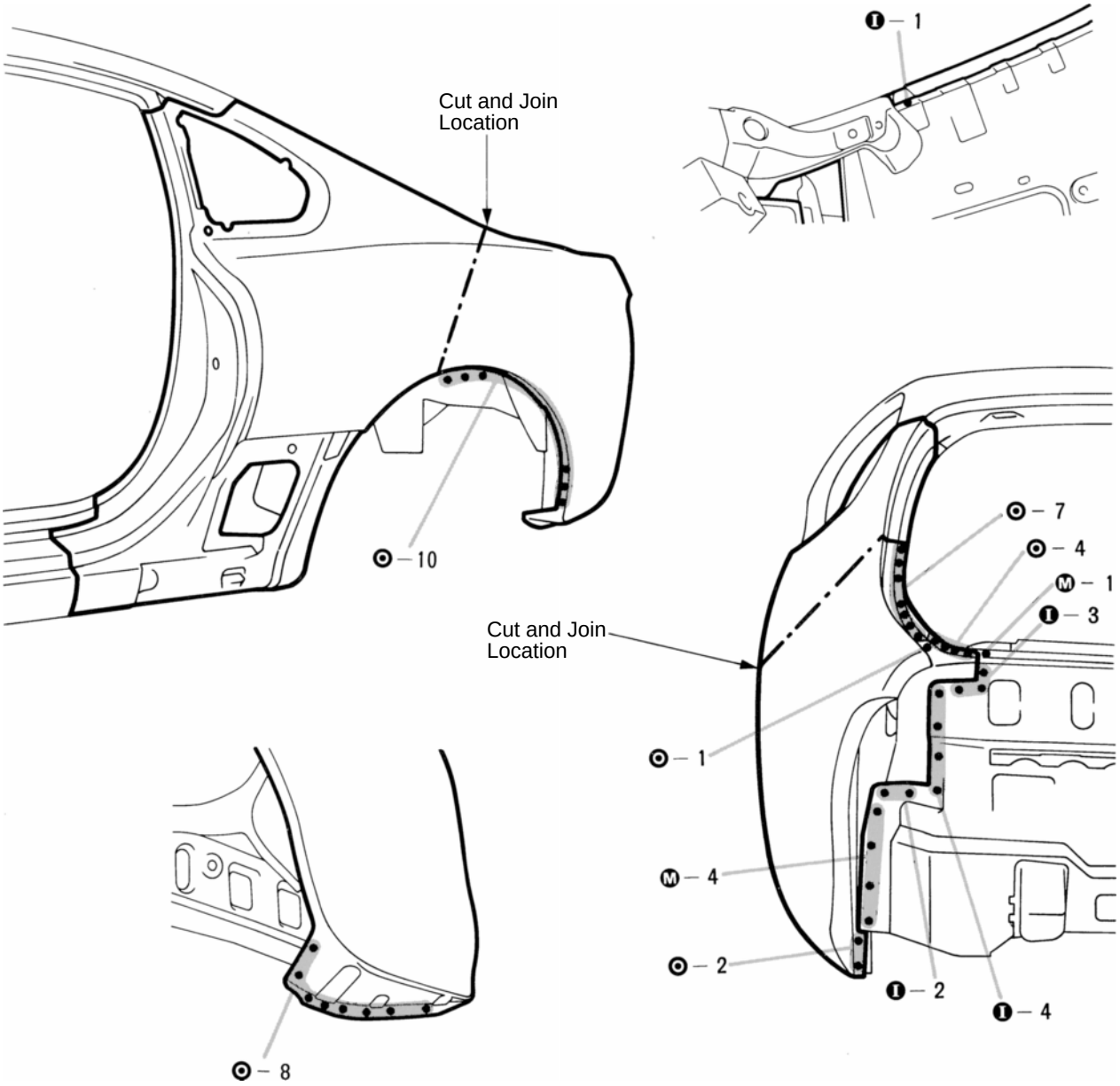

1. Cut and join the parts at the location shown above.

INSTALLATION

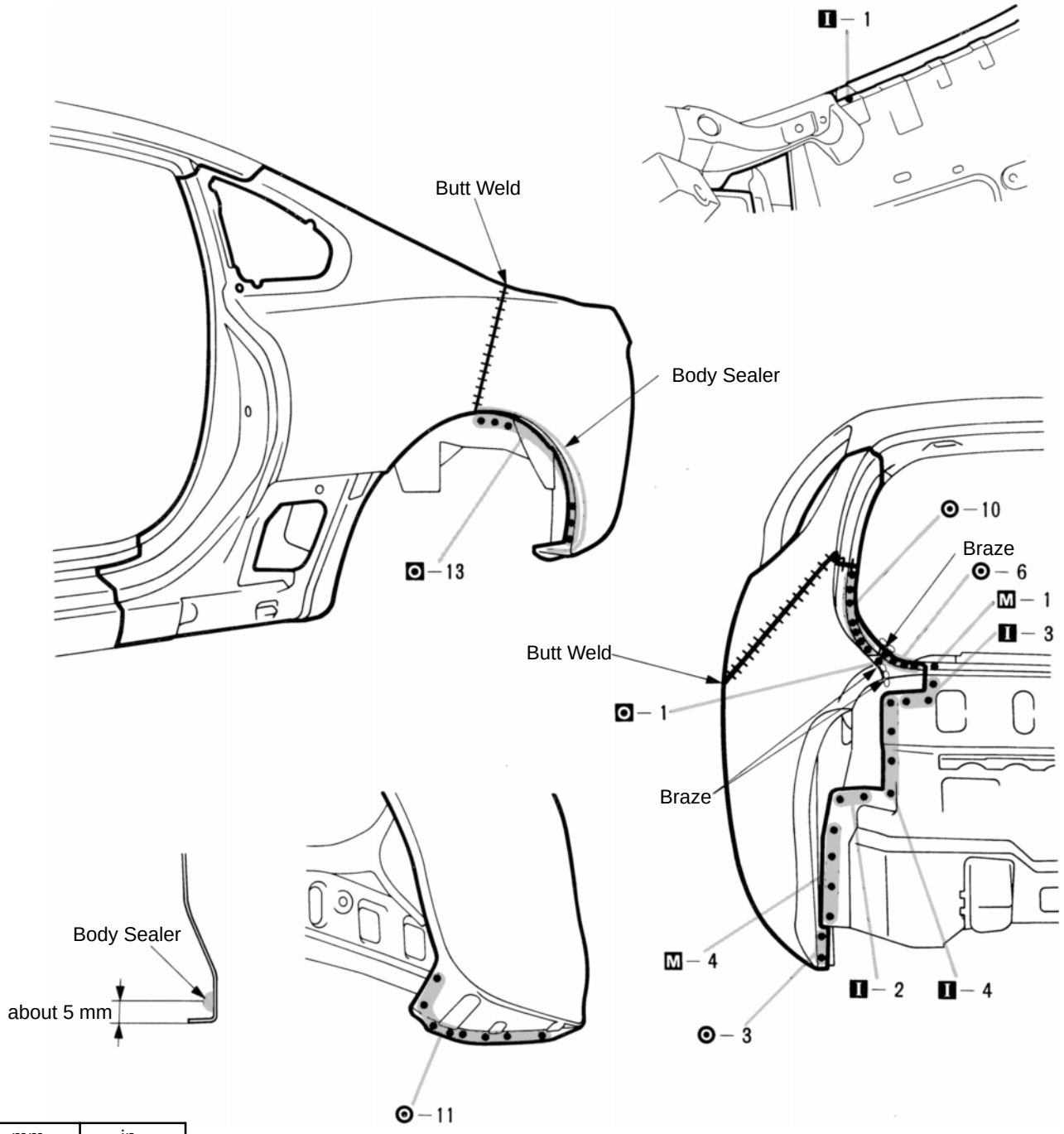

mm	in.
5	0.20

1. Before temporarily installing the new parts, apply body sealer to the wheel arch.

HINT:

1) Apply body sealer about 5 mm (0.20 in.) from the flange, avoiding any oozing.
2) Apply sealer evenly, about 3 – 4 mm (0.12 – 0.16 in.) diameter.
3) For other sealing points, refer to section AR.

2. Temporarily install the new parts and check the fit of the back door and rear combination lamp.
3. Before welding, cut the lining away from the weld seams a little.

QUARTER WHEEL HOUSING OUTER PANEL (ASSY): Normal Roof Right Side

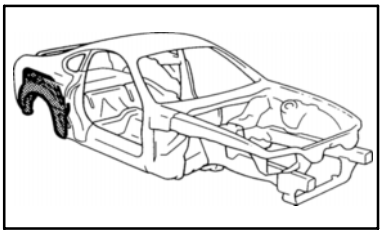

REMOVAL (With the quarter panel removed.)

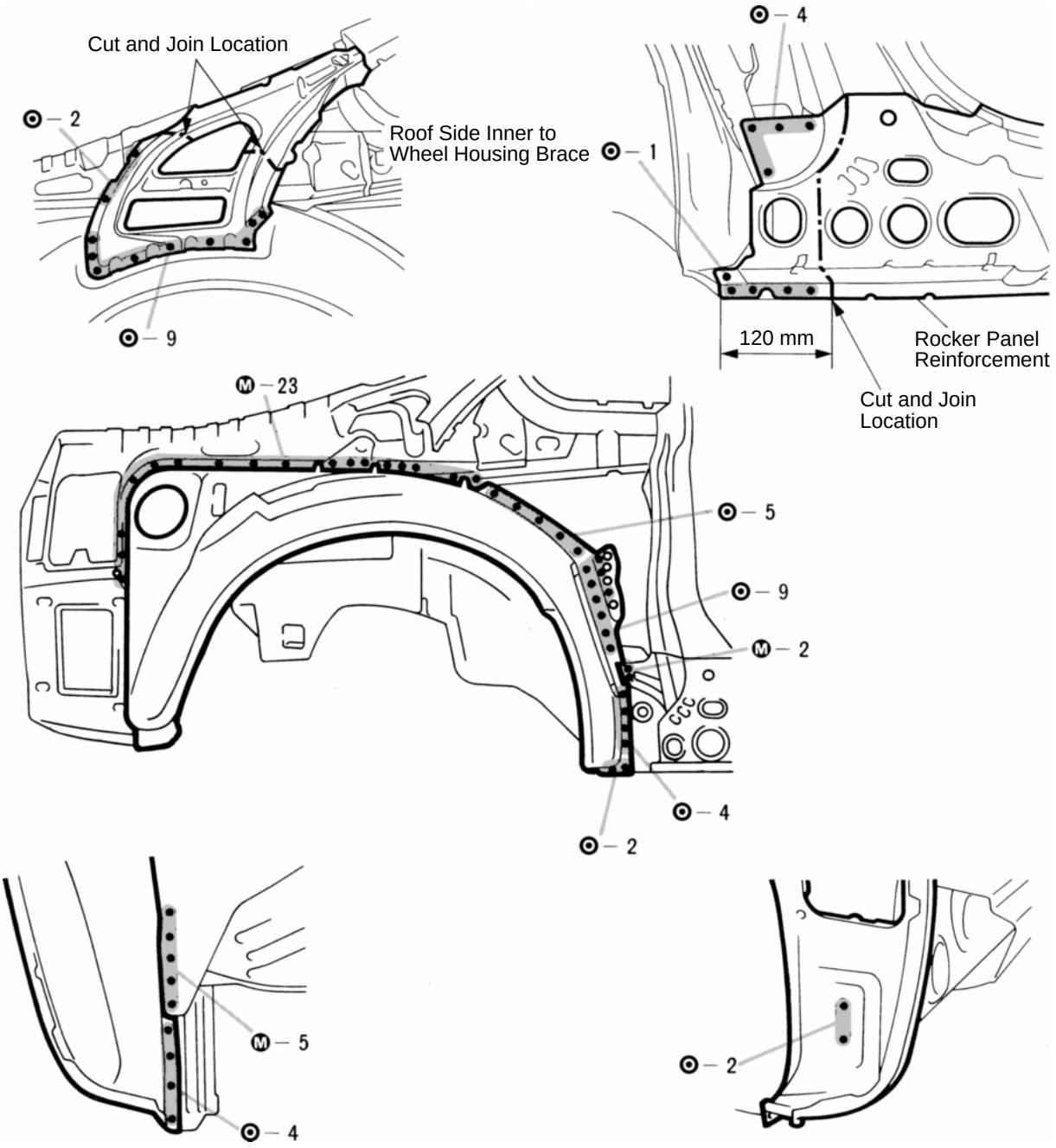

1. Cut the roof side inner to wheel housing brace and the rocker panel reinforcement end at the locations noted above. Remove the quarter wheel housing outer panel.

mm	in.
120	4.72

INSTALLATION

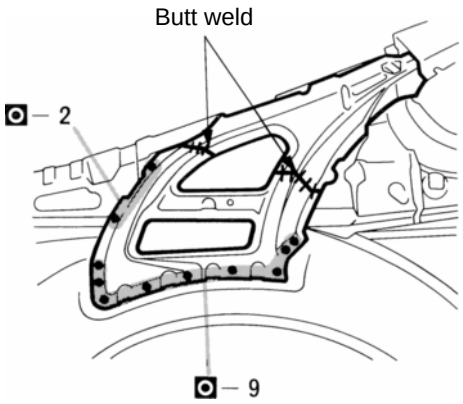

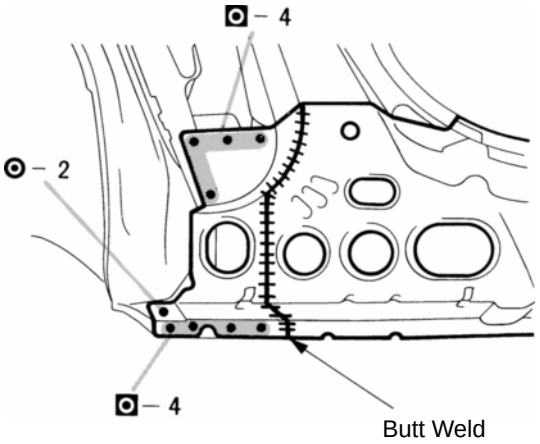

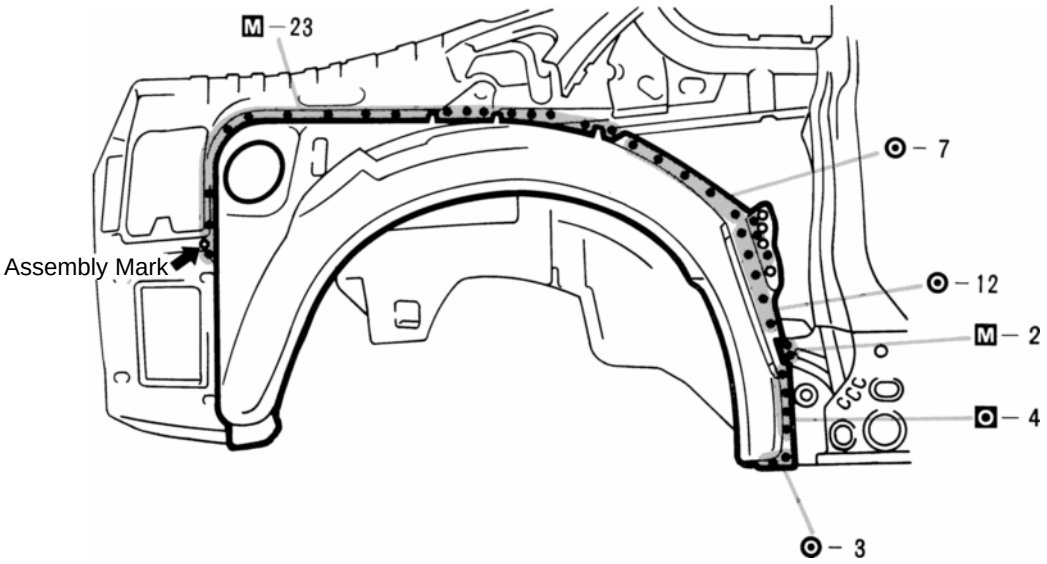

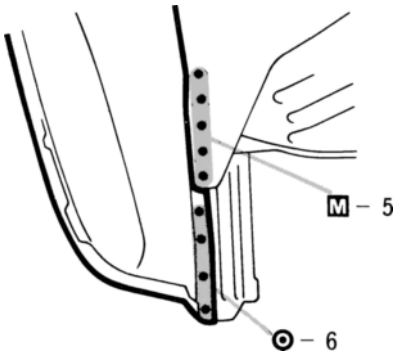

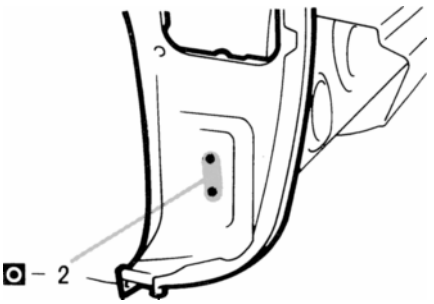

1. Determine the position of the new parts by the assembly marks of the inner and outer panels.

QUARTER WHEEL HOUSING OUTER PANEL (ASSY): Normal Roof Left Side

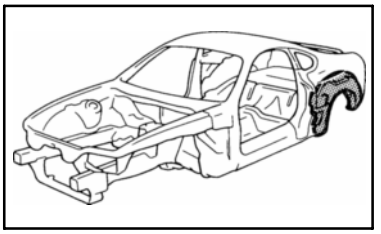

REMOVAL (With the quarter panel removed.)

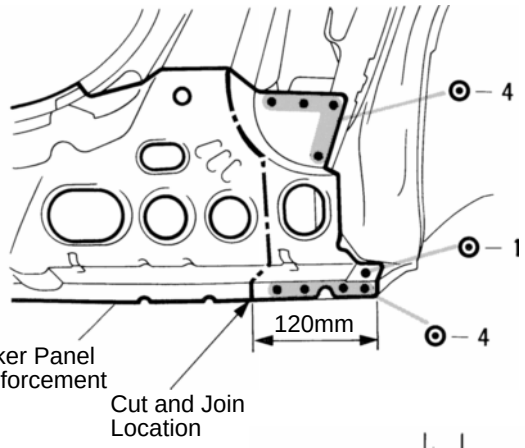

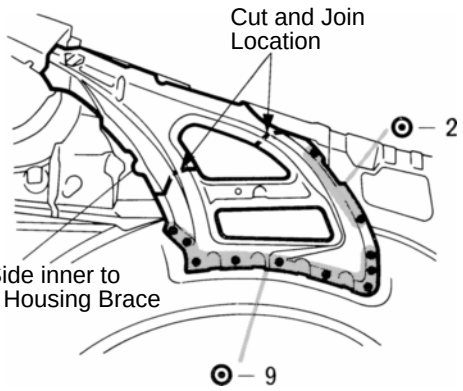

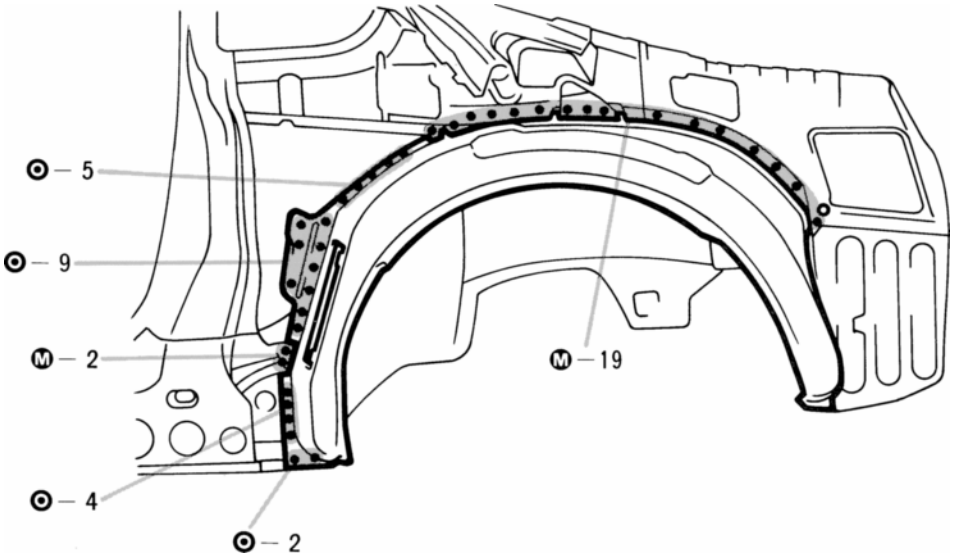

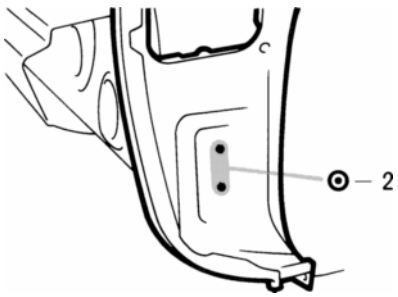

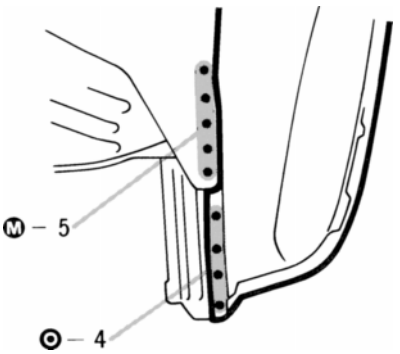

1. Cut the roof side inner to wheel housing brace and the rocker panel reinforcement end at locations shown above. Remove the quarter wheel housing outer panel.

mm	in.
120	4.72

INSTALLATION

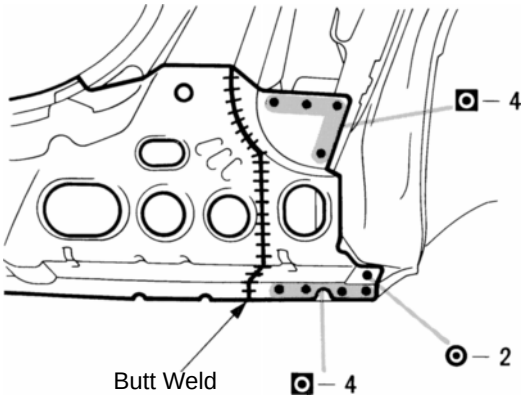

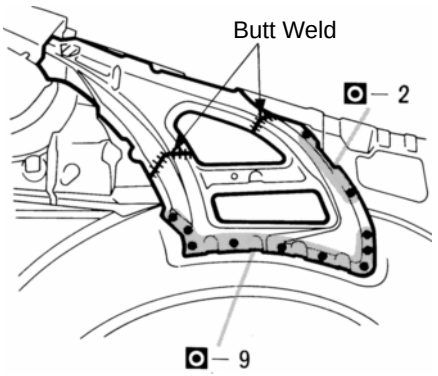

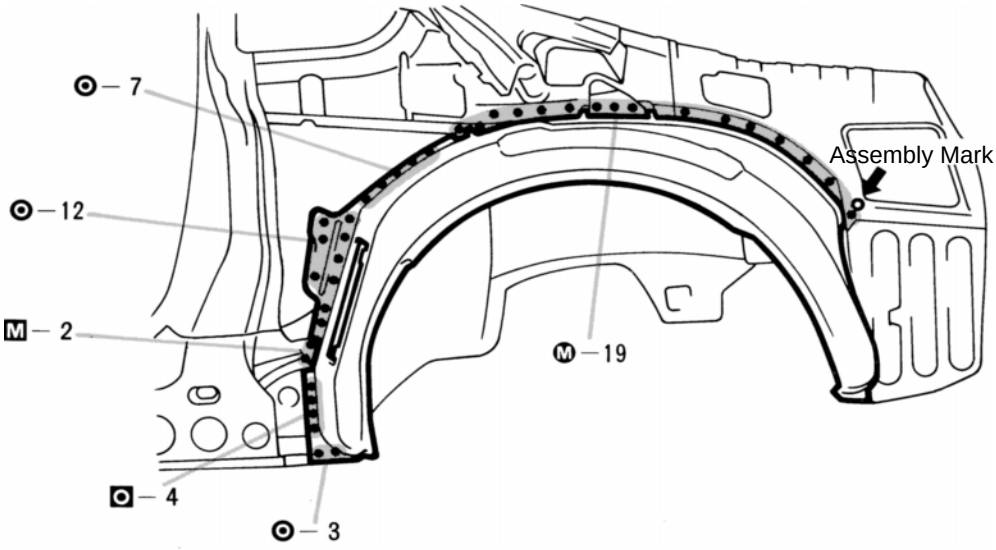

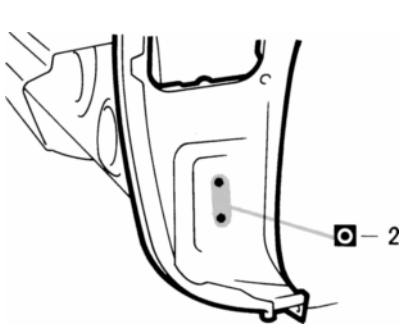

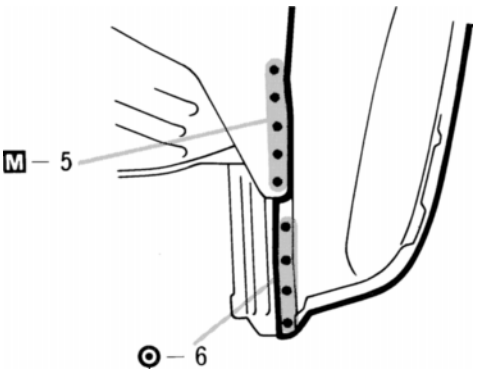

1. Determine the position of the new parts by the assembly marks of the inner and outer panels.

QUARTER WHEEL HOUSING OUTER PANEL (ASSY): Sport Roof Right Side

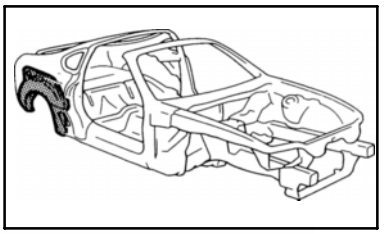

REMOVAL (With the quarter panel removed.)

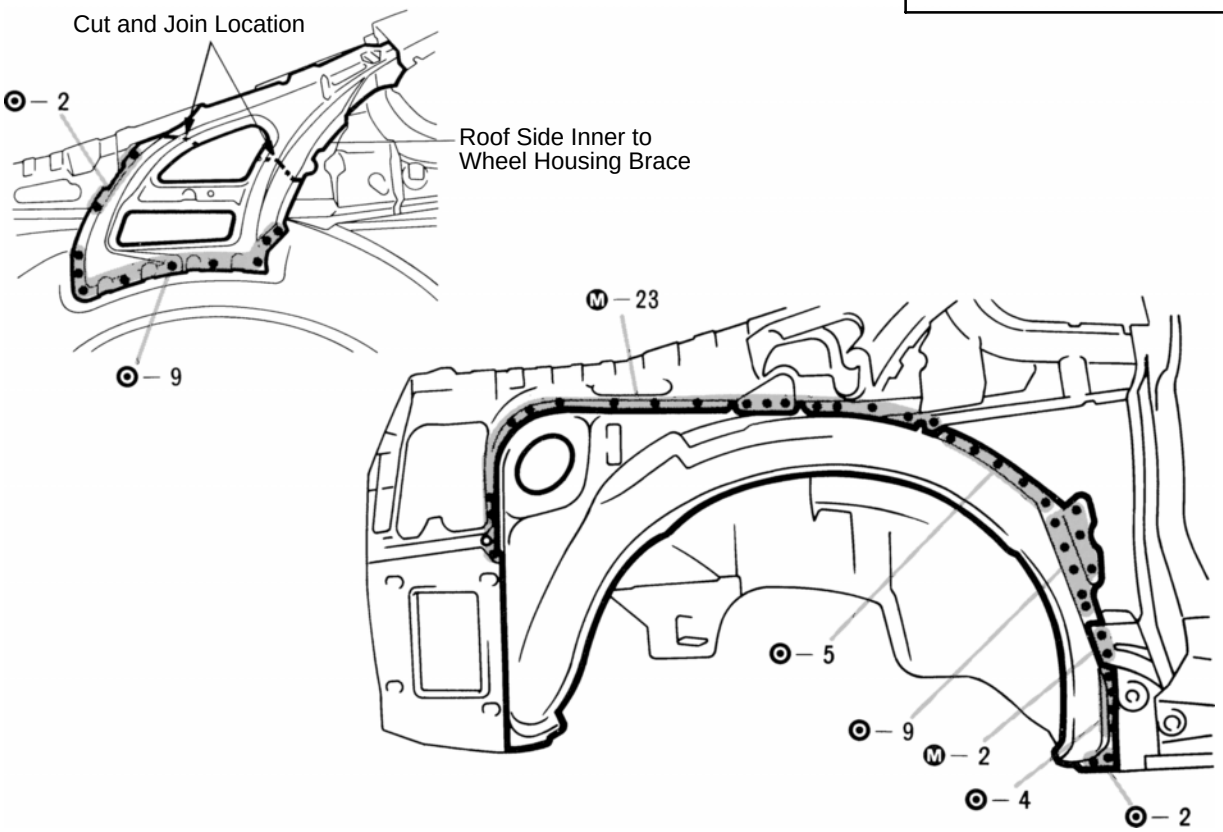

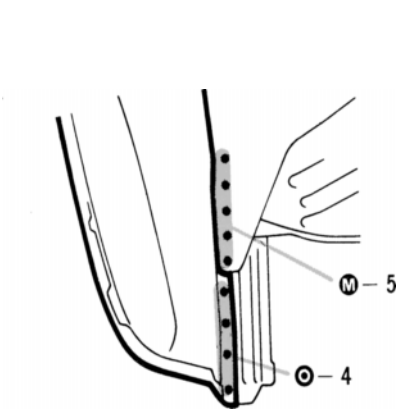

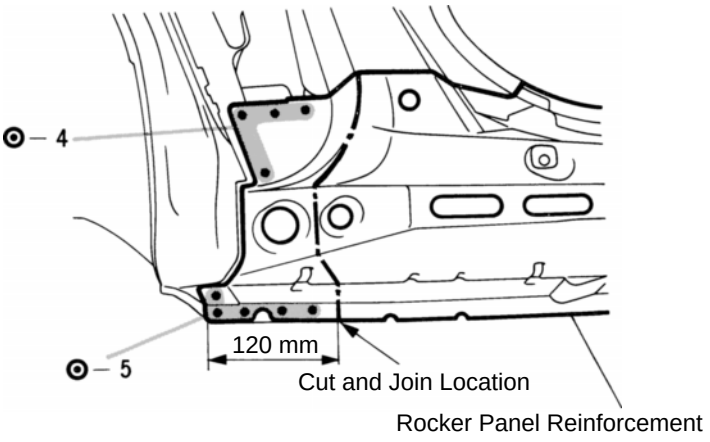

1. Cut the roof side inner to wheel housing brace and the rocker panel reinforcement end at the locations shown above. Remove the quarter wheel housing outer panel.

mm	in.
120	4.72

INSTALLATION

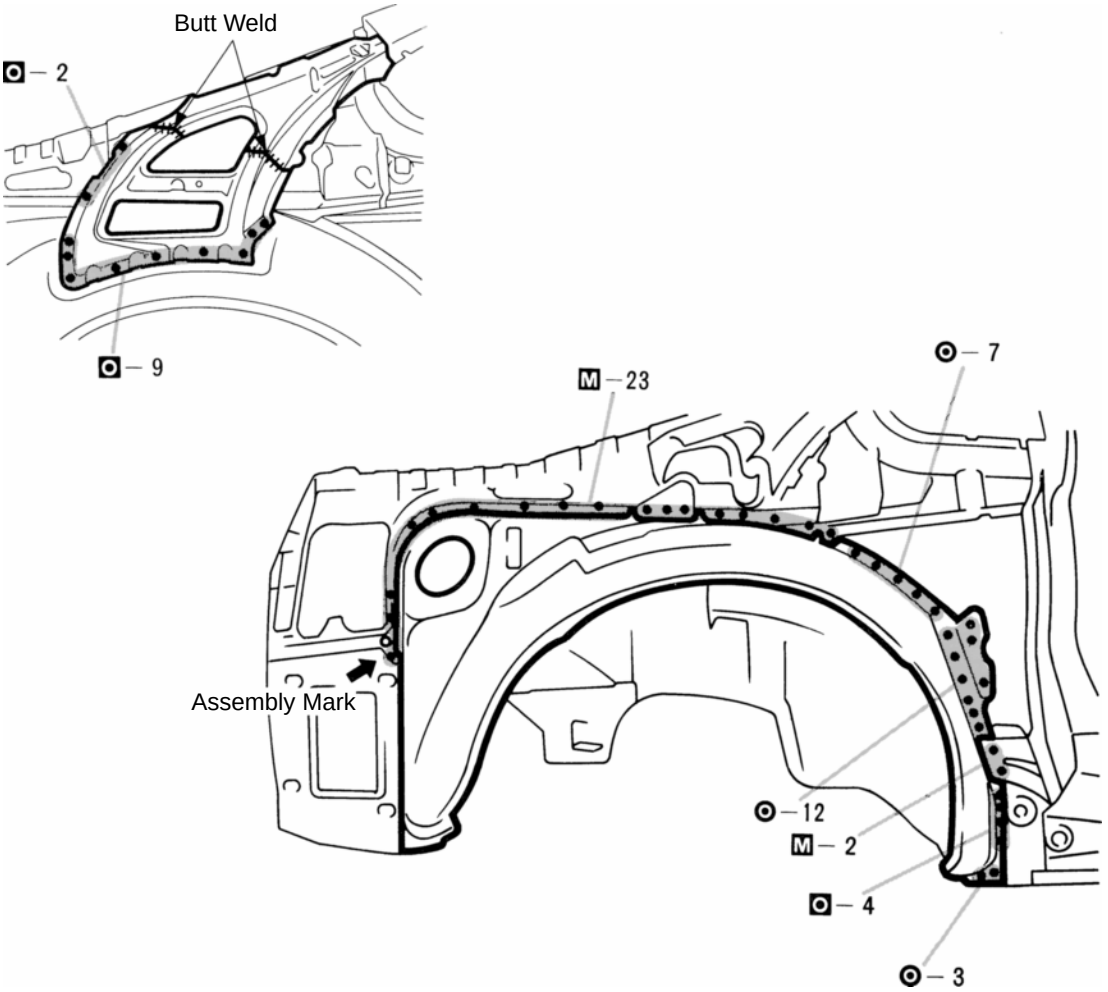

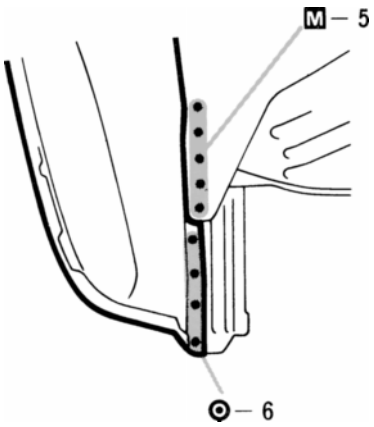

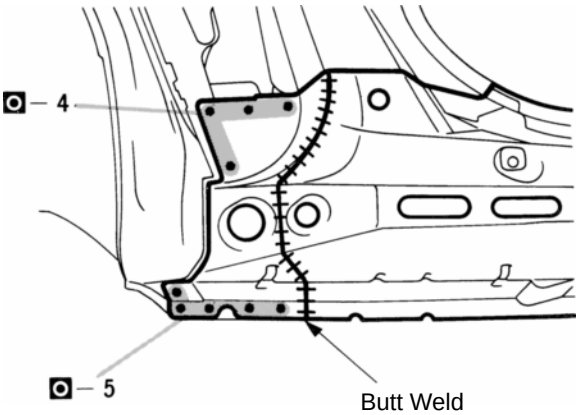

1. Determine the position of the new parts by the assembly marks of the inner and outer panels.

QUARTER WHEEL HOUSING OUTER PANEL (ASSY): Sport Roof Left Side

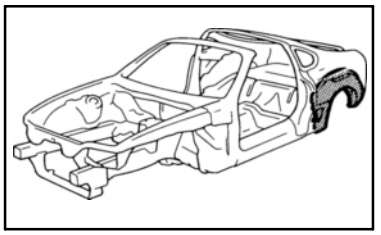

REMOVAL (With the quarter panel removed.)

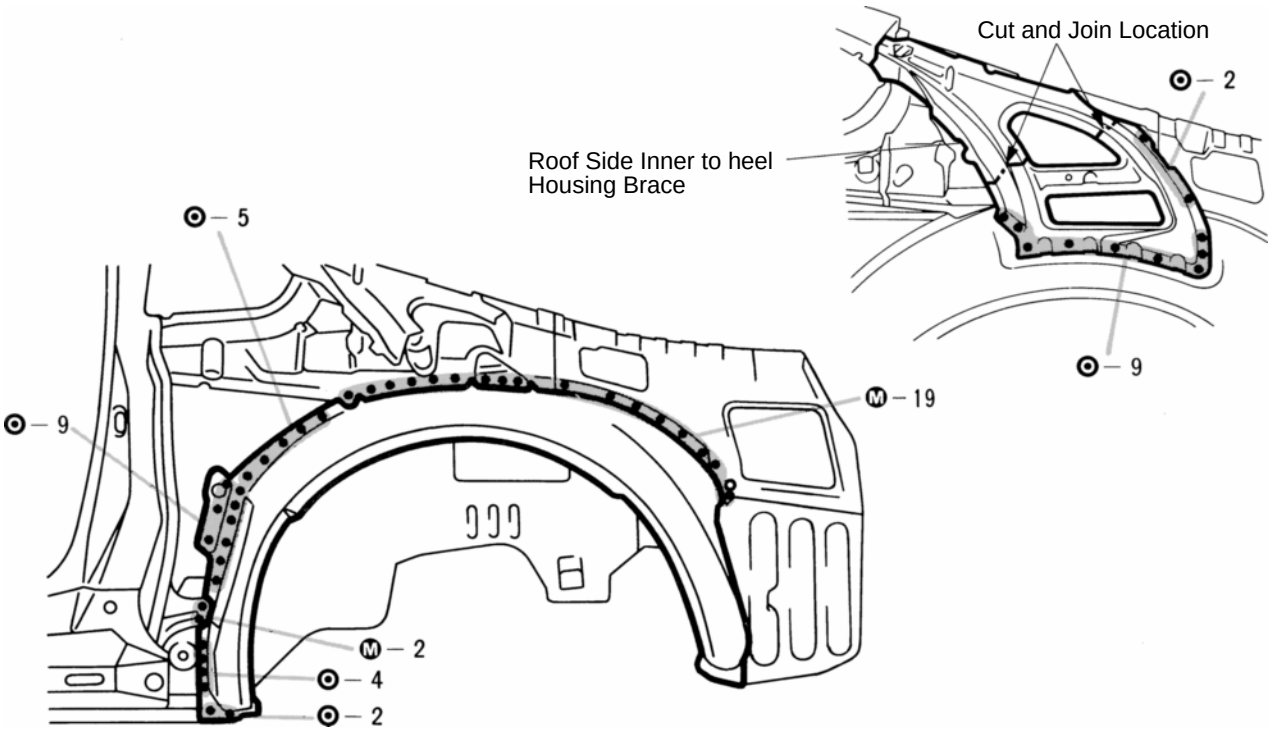

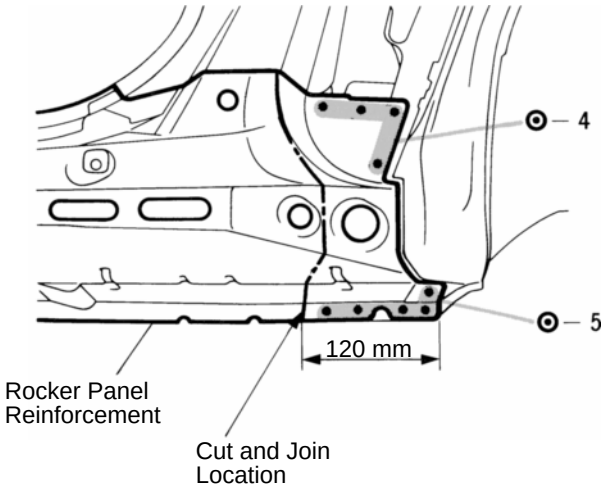

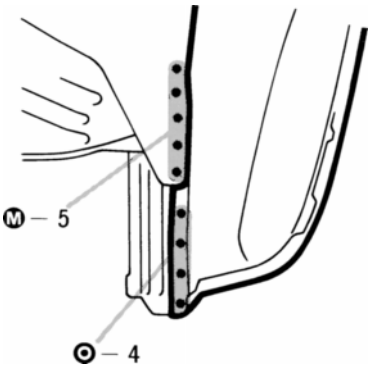

1. Cut the roof side inner to wheel housing brace and the rocker panel reinforcement end at the location shown above. Remove the quarter wheel housing outer panel.

mm	in.
120	4.72

INSTALLATION

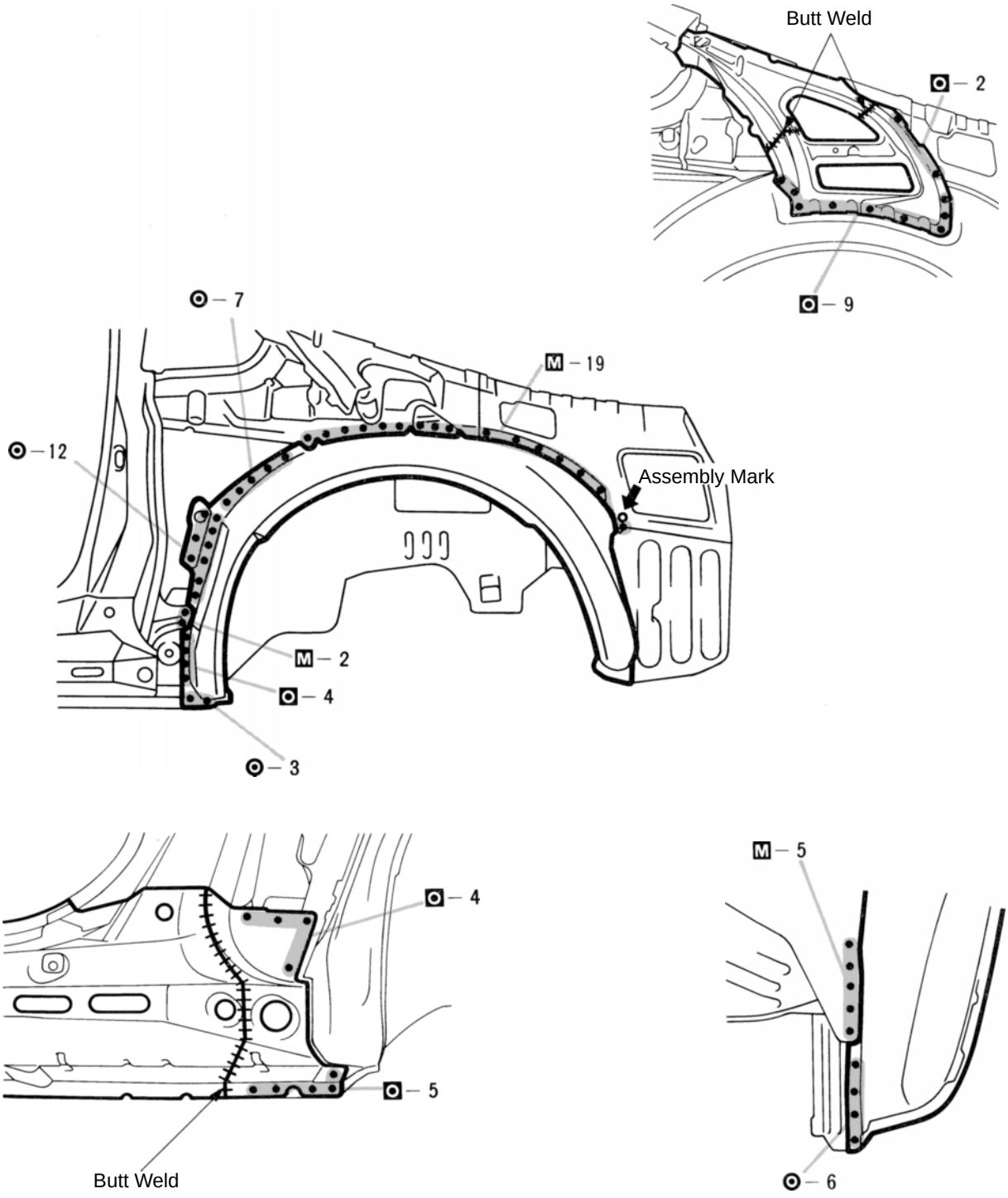

1. Determine the position of the new parts by the assembly marks of the inner and outer panels.

BODY LOWER BACK PANEL (ASSY)

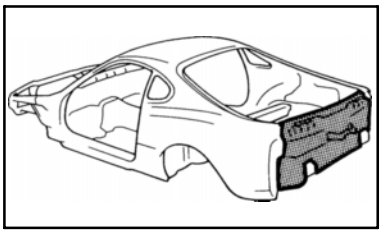

REMOVAL

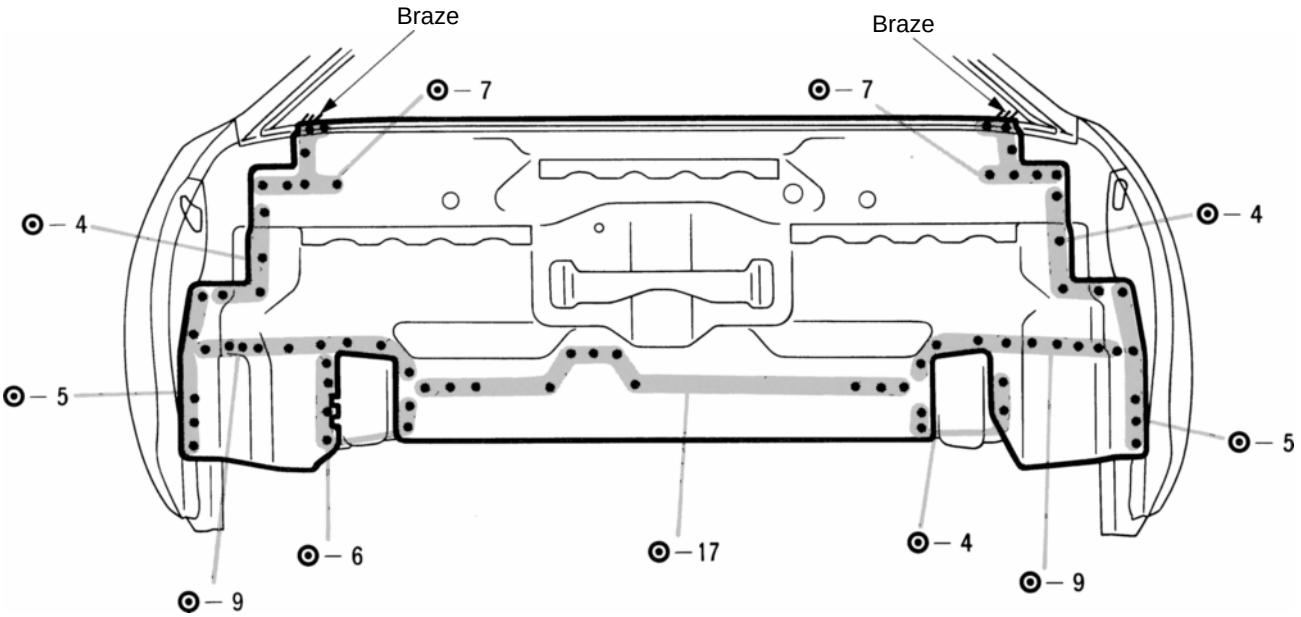

INSTALLATION

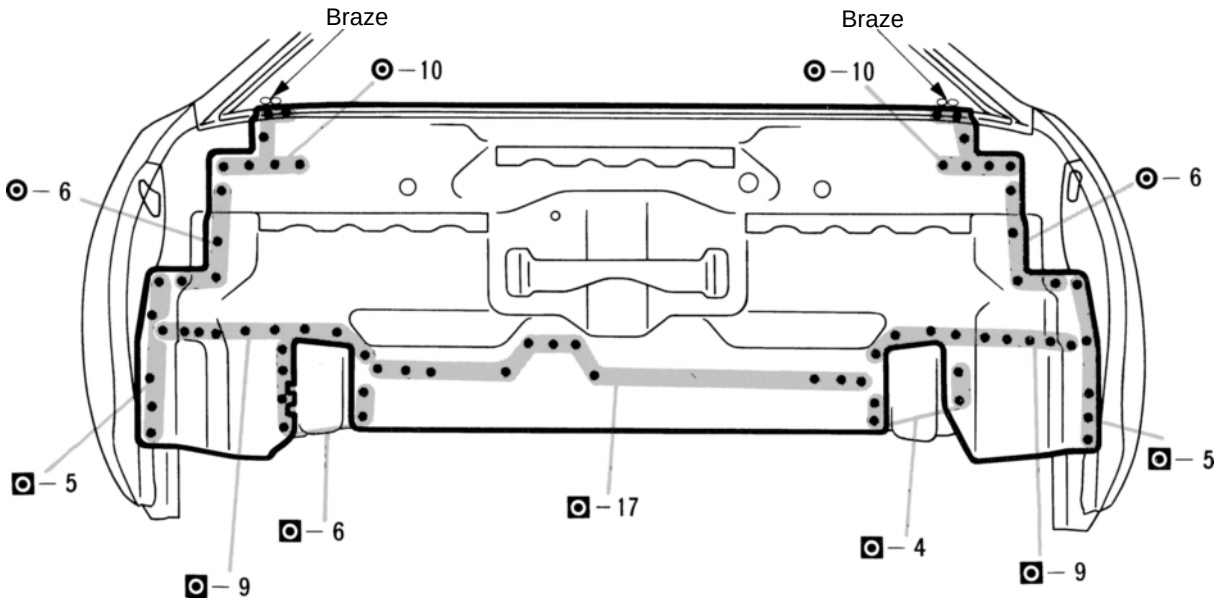

1. Temporarily installing the new parts, check the fit of the back door and rear combination lamp.

QUARTER INNER PANEL (CUT–P): Right Side

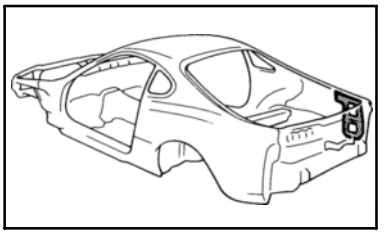

REMOVAL (With the quarter panel and body lower back panel removed.)

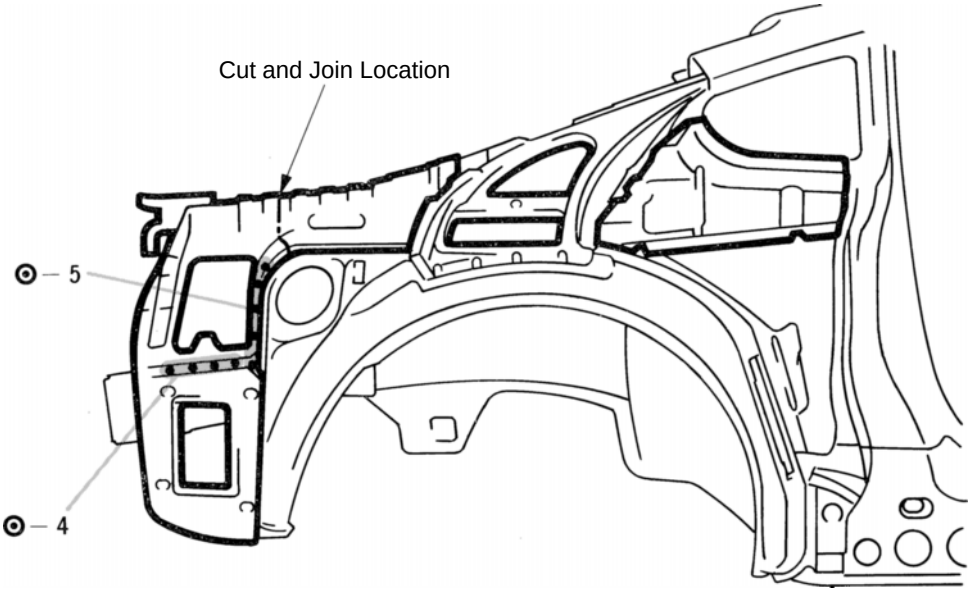

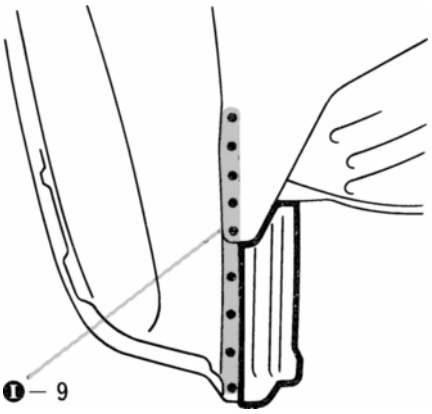

1. Cut and join the parts at the location as shown above.

INSTALLATION

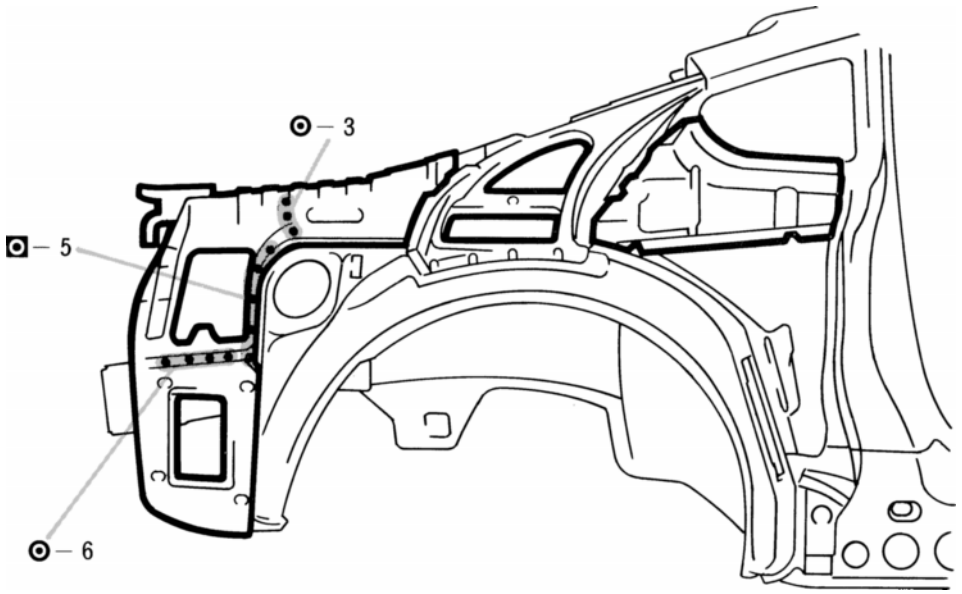

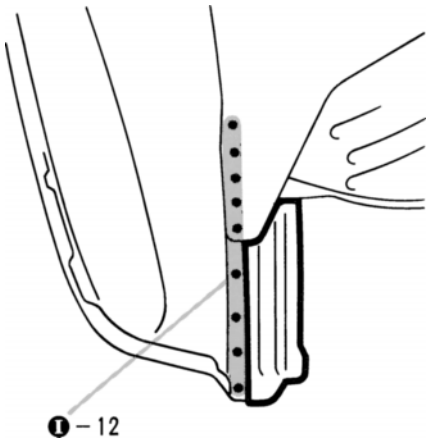

1. Overlap the new parts 20 mm (0.79 in.) at the cut locations and spot weld.
2. For overlapping areas, apply sealer to both sides.

HINT: For other sealing points, refer to section AR.

QUARTER INNER PANEL (CUT–P): Left Side

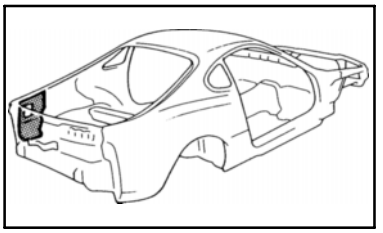

REMOVAL (With the quarter panel and body lower back panel removed.)

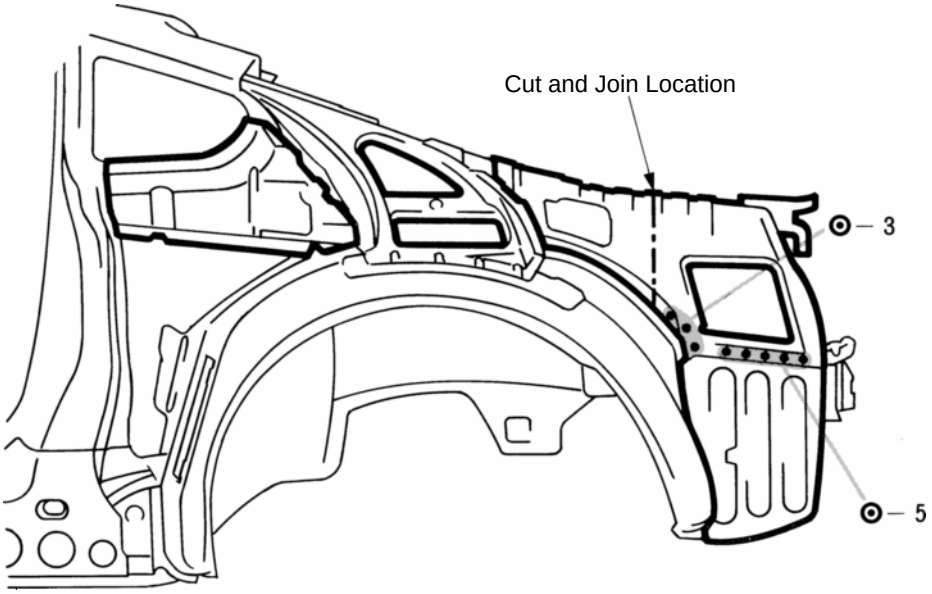

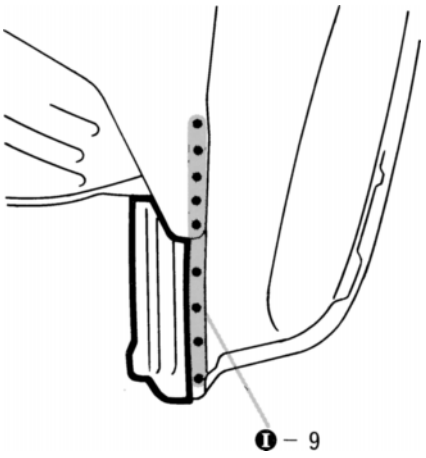

1. Cut and join the parts at the location as shown above.

INSTALLATION

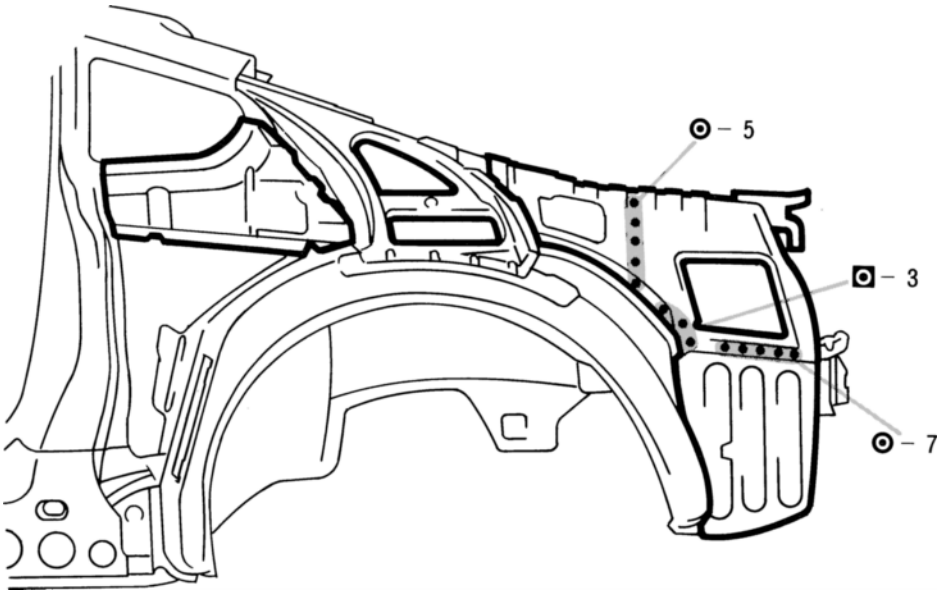

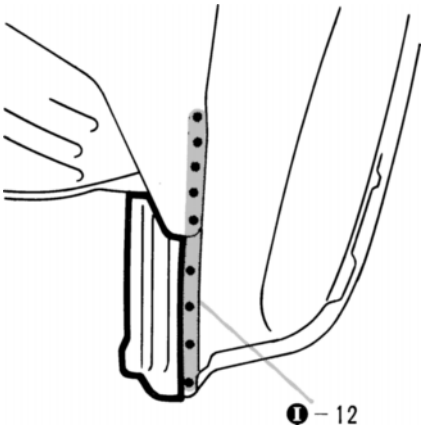

1. Overlap the new parts 20 mm (0.79 in.) at the locations and spot weld.
2. For overlapping areas apply sealer to both sides.

HINT: For other sealing points, refer to section AR.

REAR FLOOR PAN (ASSY)

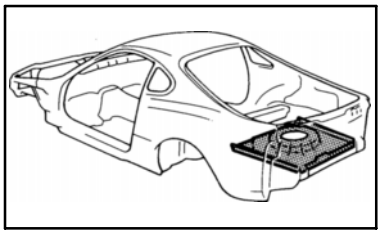

REMOVAL (With the body lower back panel removed.)

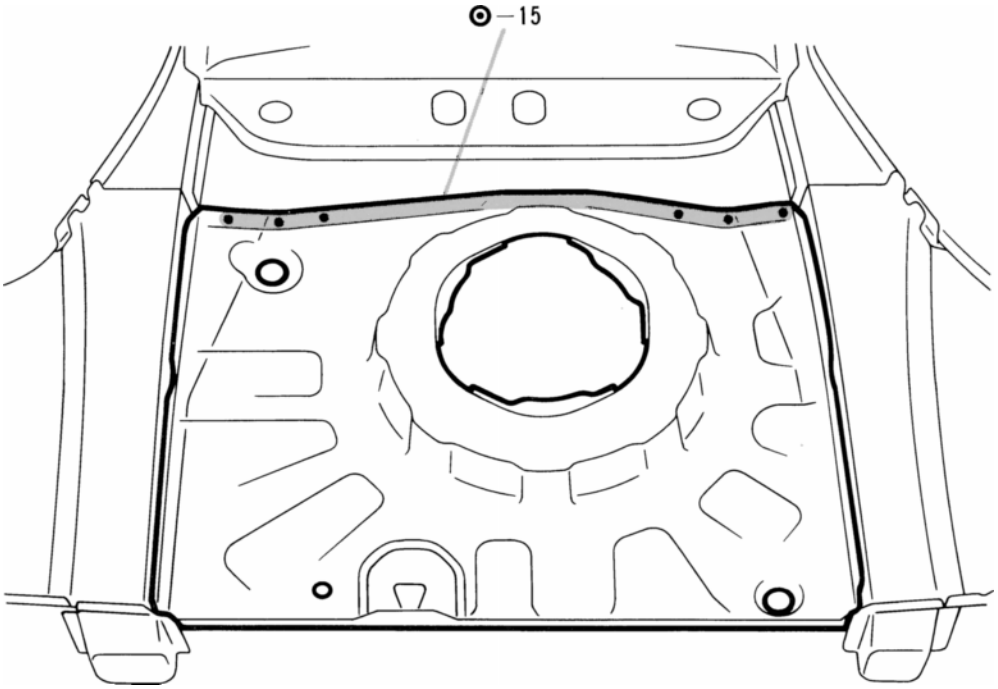

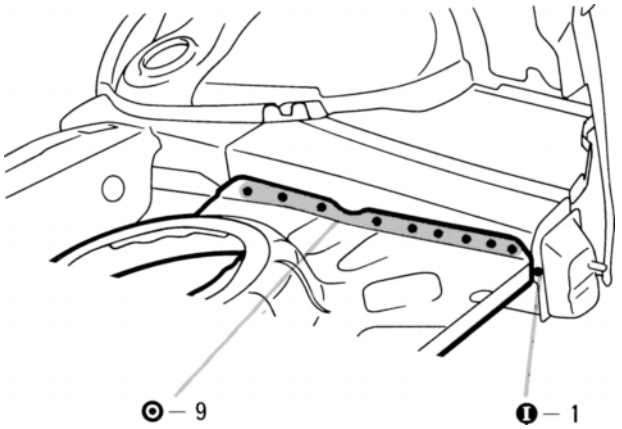

INSTALLATION

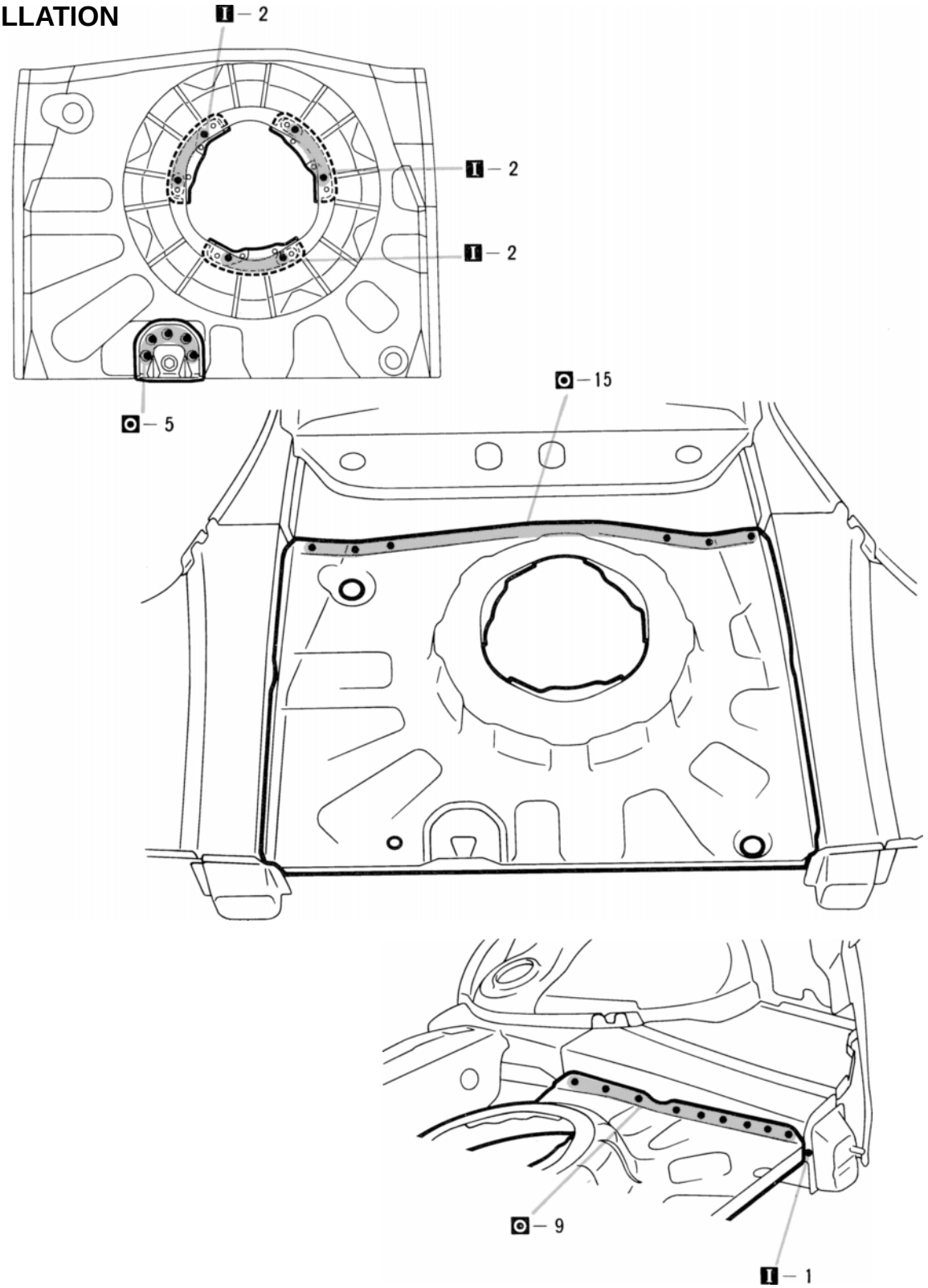

REAR FLOOR PAN TO QUARTER PANEL EXTENSION (ASSY)

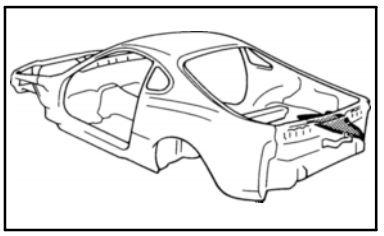

REMOVAL (With the body lower back panel removed.)

(Right Side)

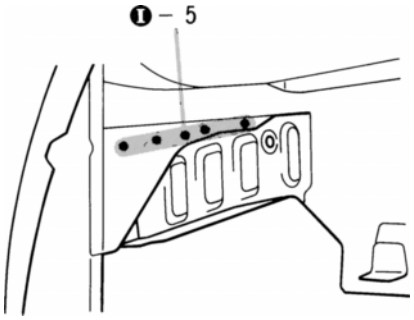

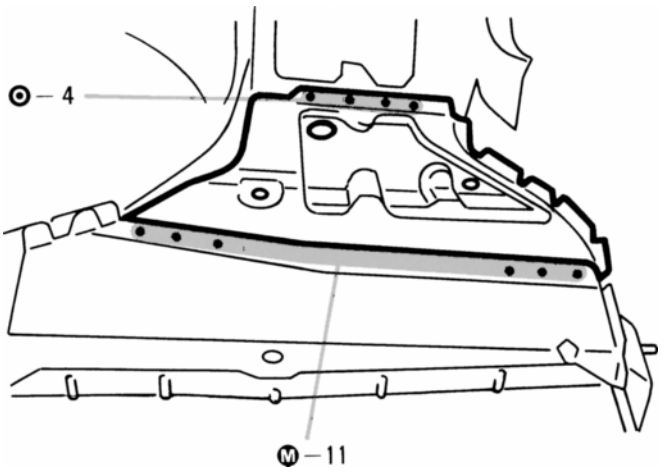

(Left Side)

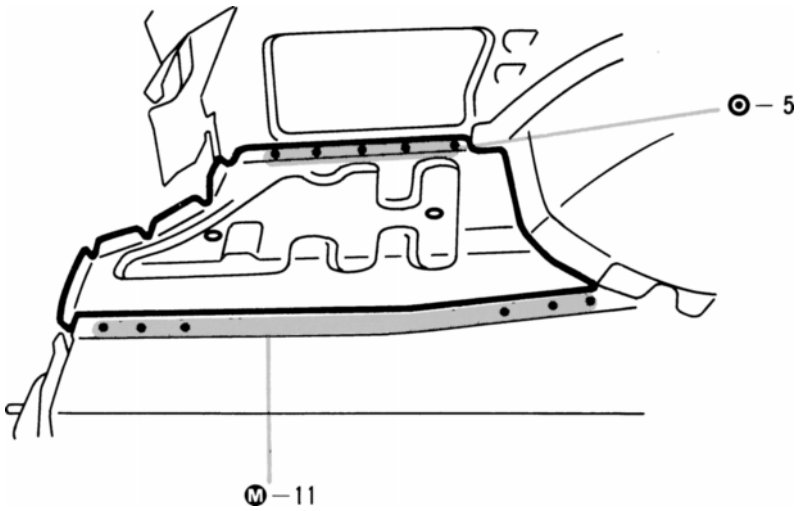

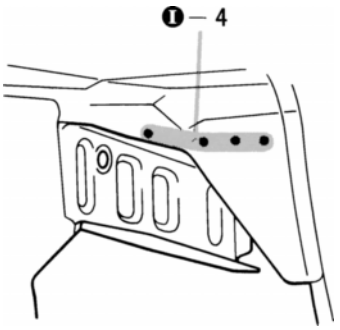

1. Push down on the rear floor pan to quarter panel extension and remove it.

INSTALLATION

(Right Side)

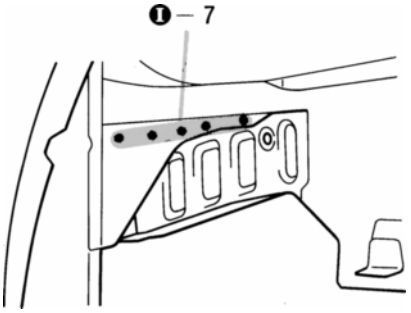

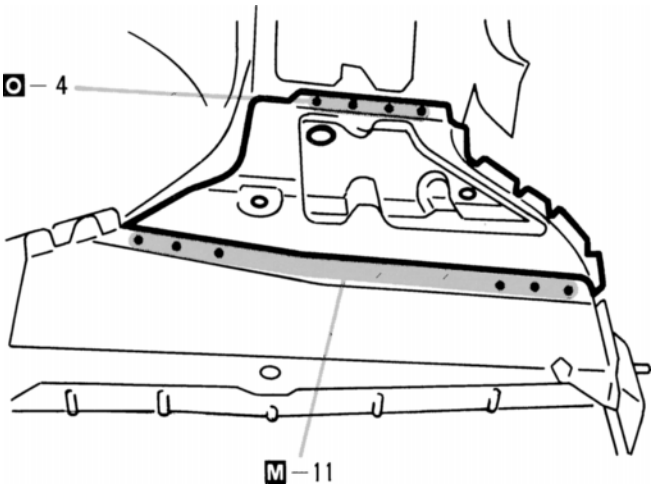

(Left Side)

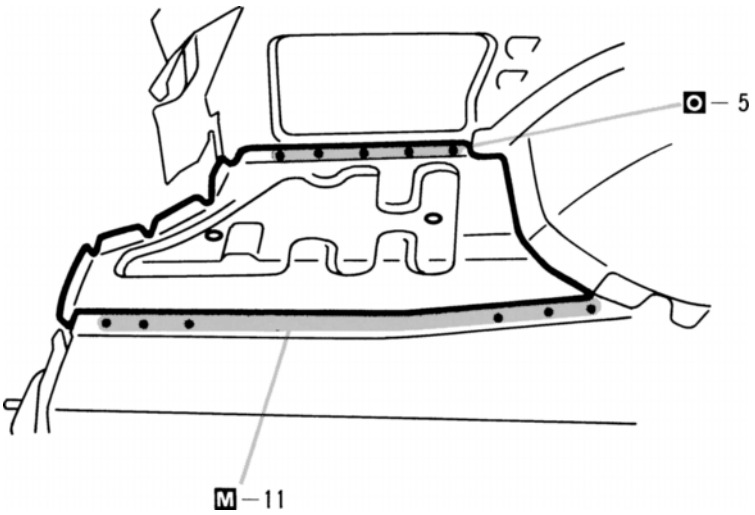

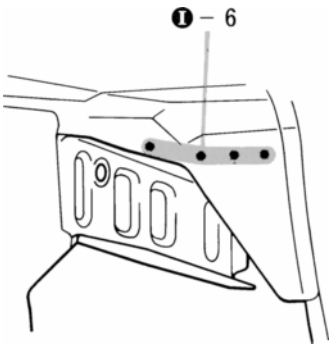

REAR FLOOR SIDE REAR MEMBER (ASSY)

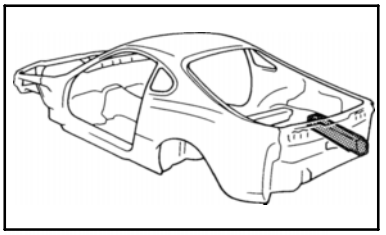

REMOVAL (With the rear floor pan and rear floor pan to quarter panel extension removed.)

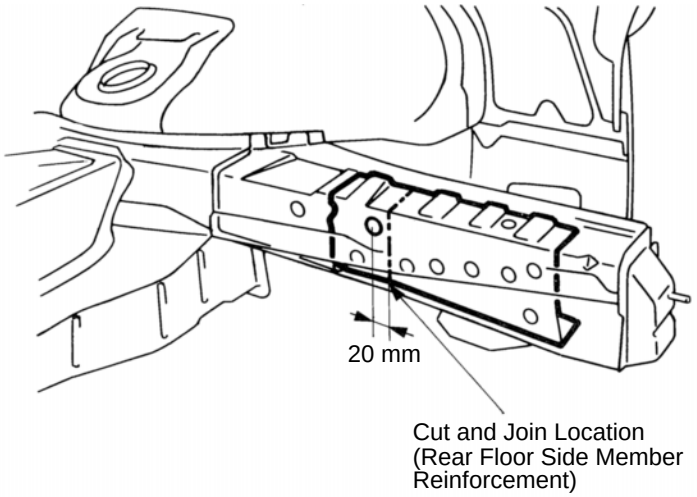

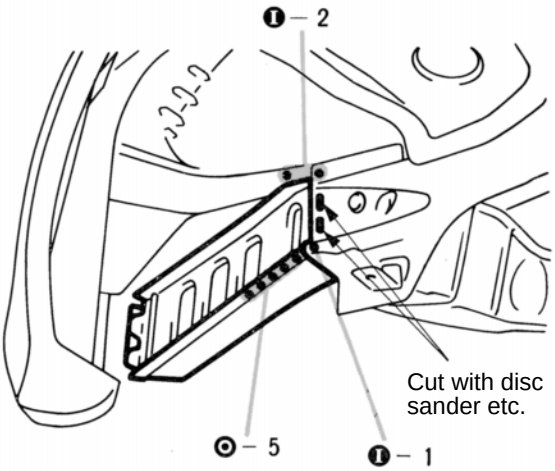

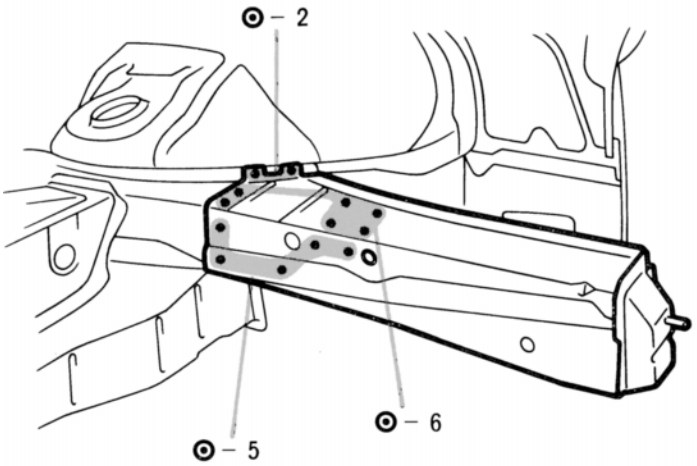

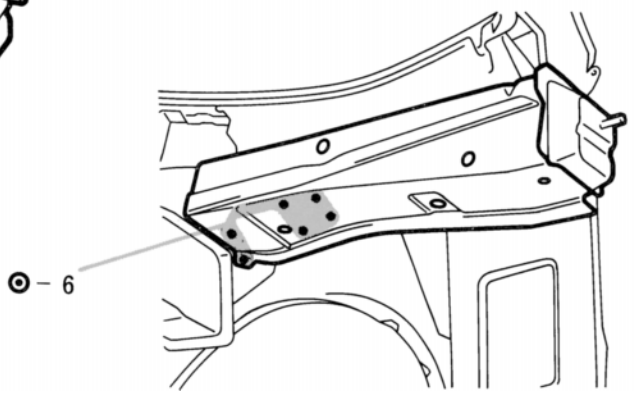

1. Cut out the rear floor side member reinforcement at the cut location indicated above.

mm	in.
20	0.79

INSTALLATION

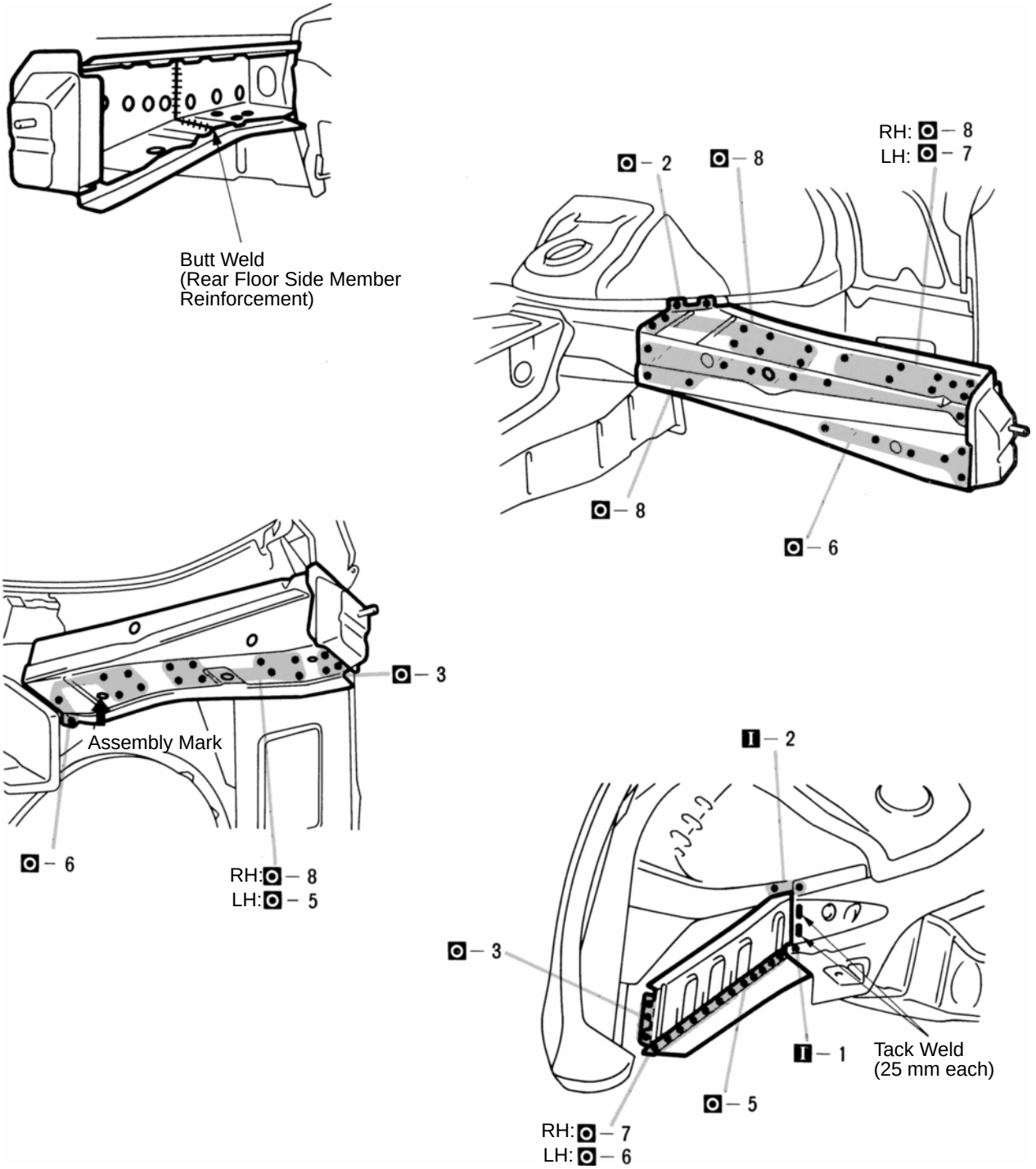

mm	in.
25	0.98

1. When temporarily installing the new parts, determine the installation position by the assembly mark. Then, measure each part in accordance with the body dimension diagram.

REAR FLOOR NO. 2 CROSSMEMBER (ASSY)

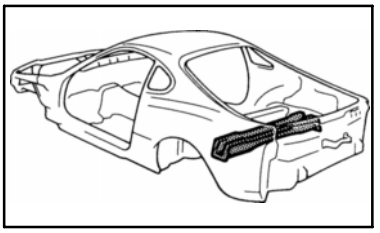

REMOVAL

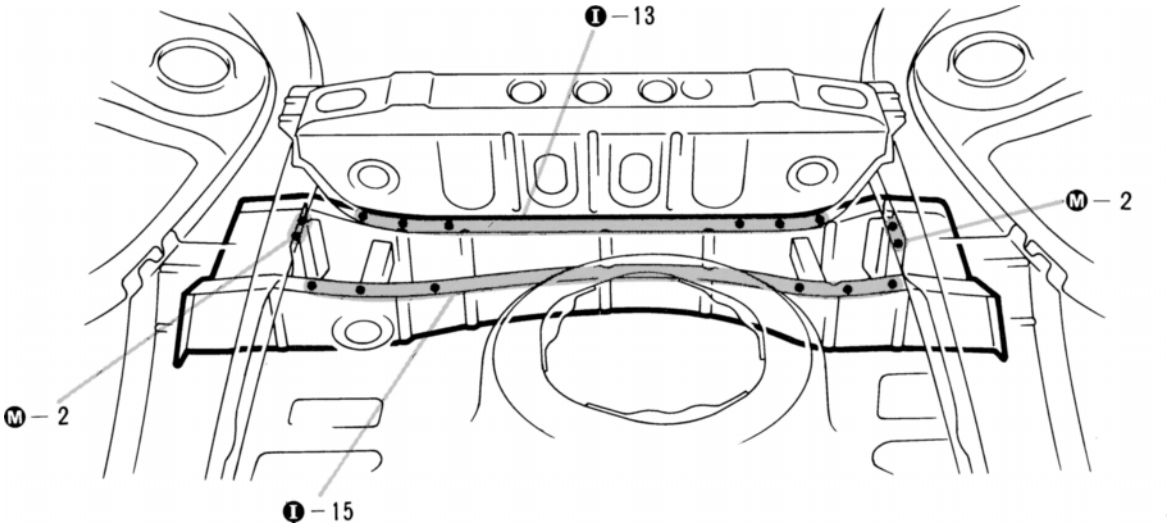

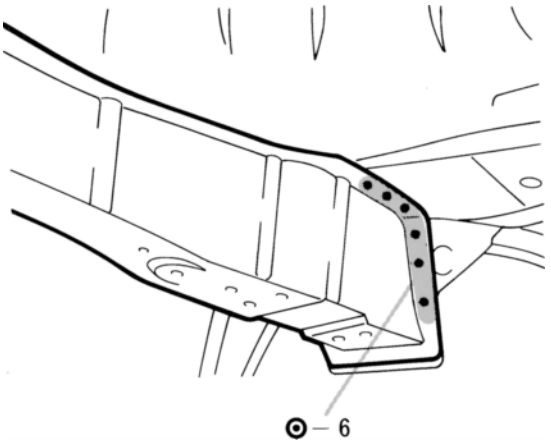

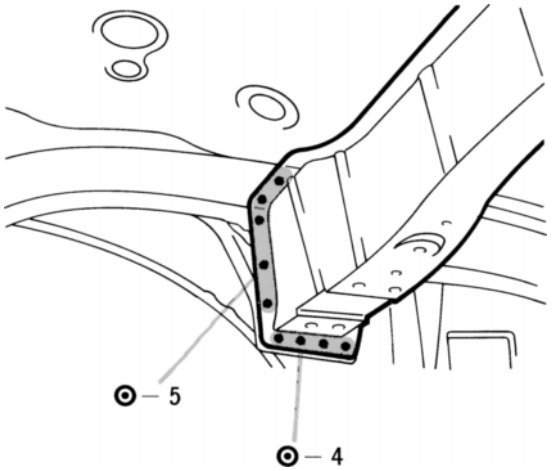

INSTALLATION

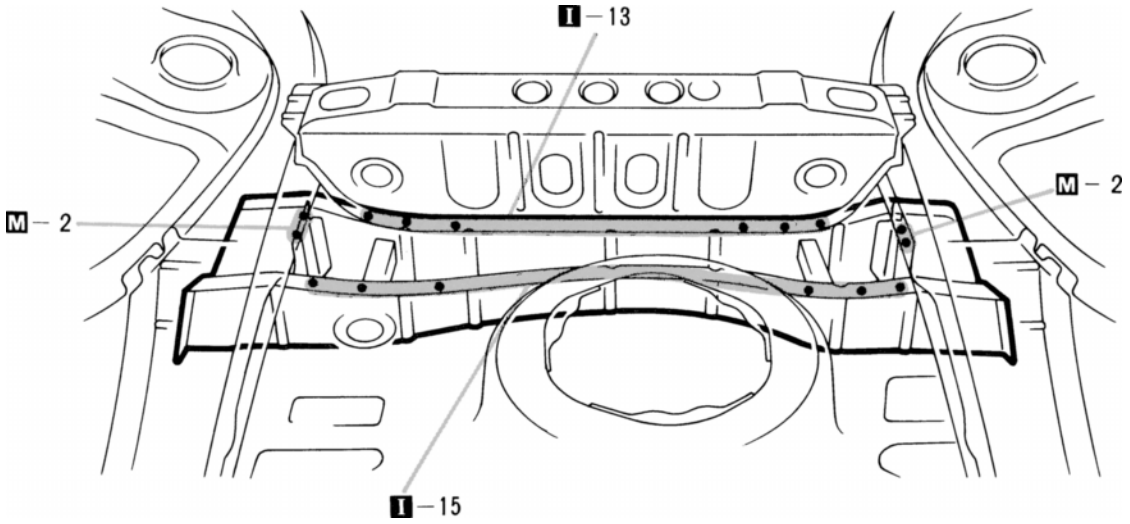

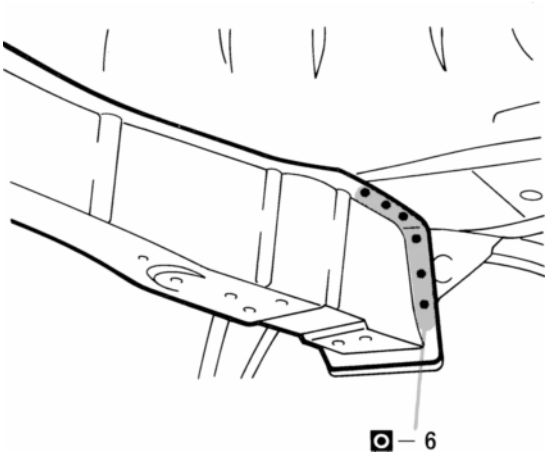

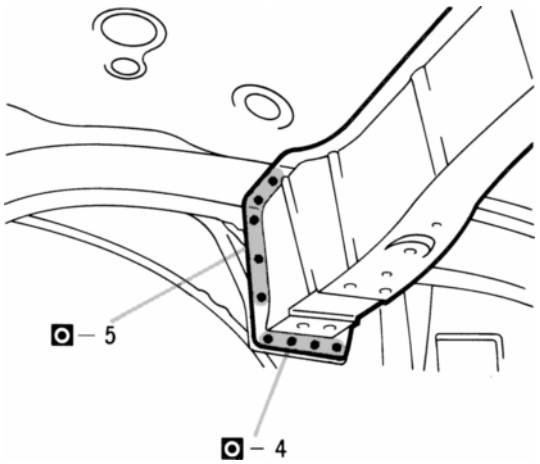

1. Temporarily install the new parts and measure each part in accordance with the body dimension diagram.

ROOF PANEL (ASSY): Normal Roof

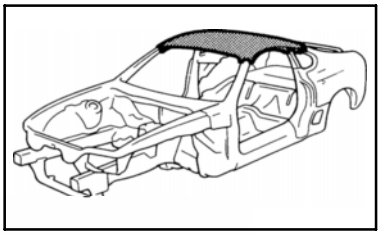

REMOVAL

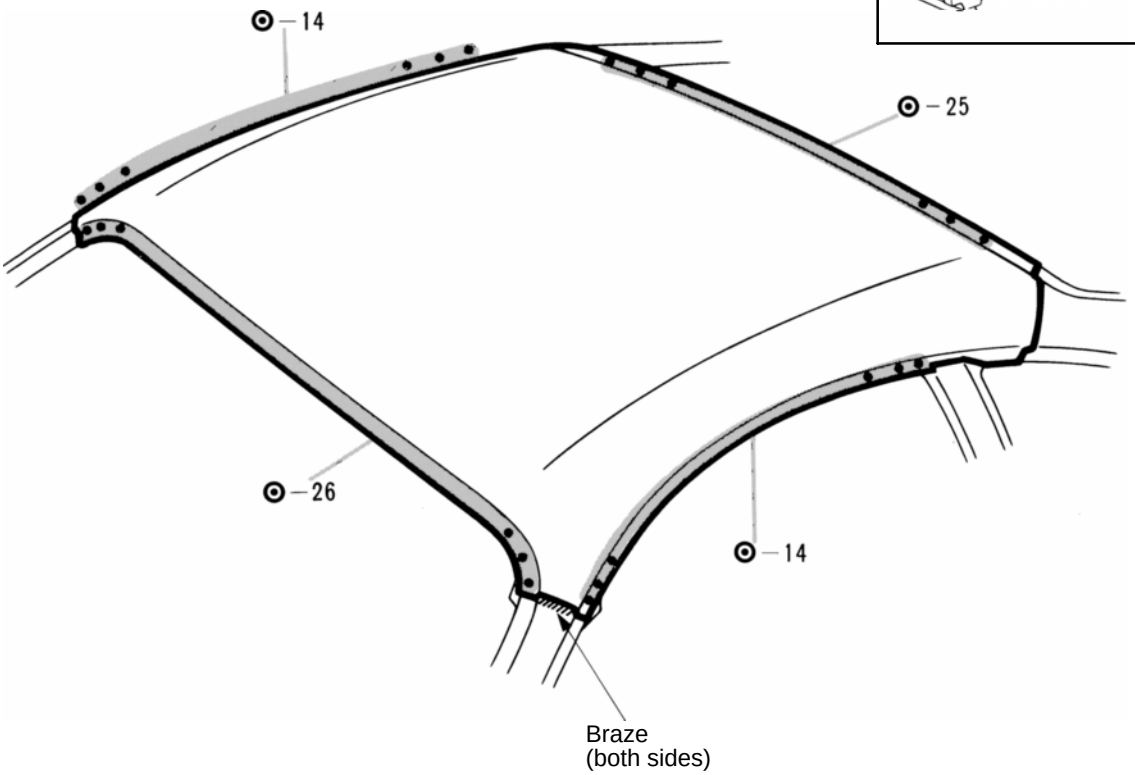

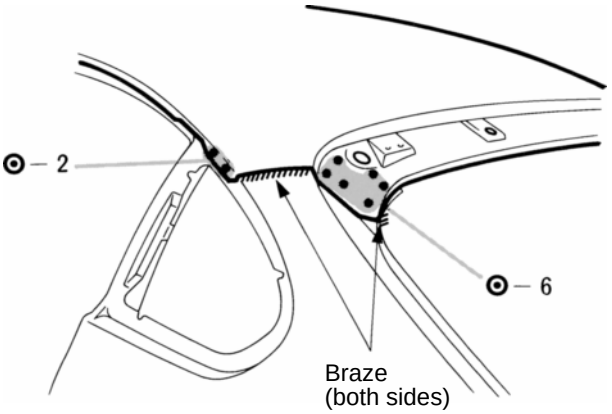

1. Heat the brazed area of the front body pillar and quarter panel and scrape off the brazing with a wire brush

HINT: Be careful not to overheat the pillar sides.

INSTALLATION

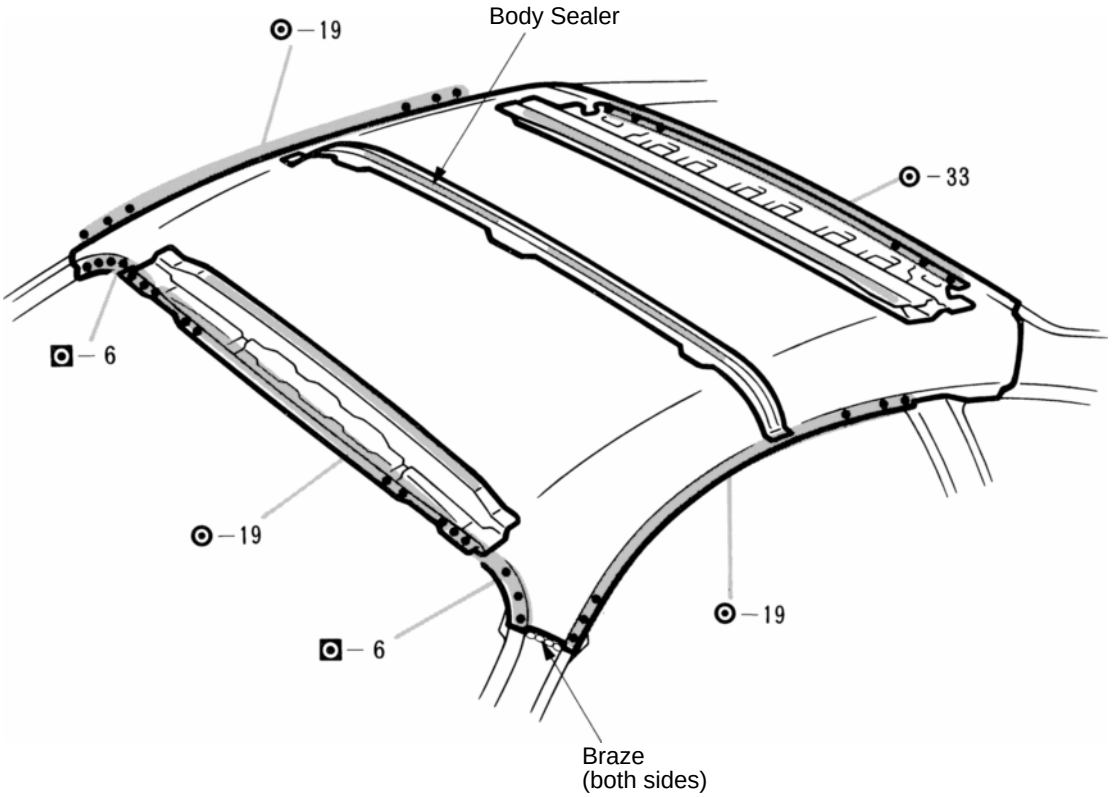

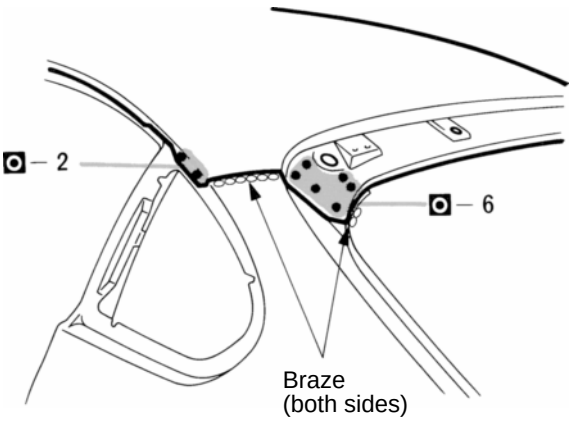

1. Before temporarily installing the new parts, apply body sealer to the windshield header panel, roof panel reinforcement and back door opening frame.

HINT:

1) Apply just enough sealer for the new parts to make contact.

2) For other sealing points, refer to Section AR.

2. Braze the front body pillar and quarter panel connection.

HINT: Before performing these operations, place a wet rag on the roof panel to protect it from damage.

ROOF PANEL (ASSY): Sport Roof

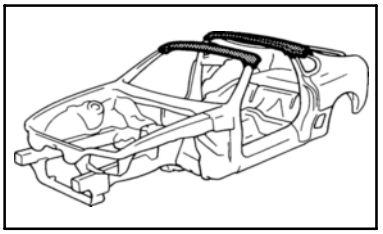

REMOVAL

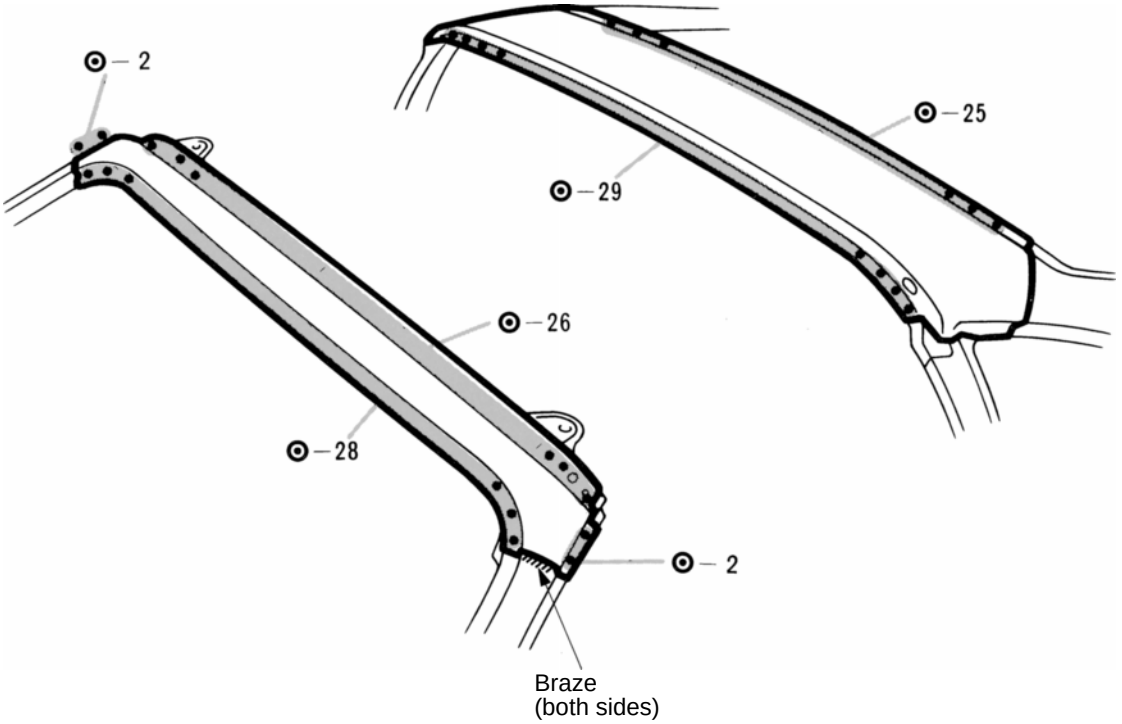

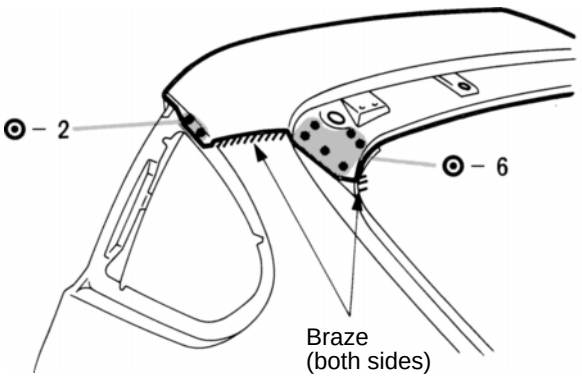

1. Heat the brazed area of the front body pillar and quarter panel and scrape off the brazing with a wire brush.

HINT: Be careful not to overheat the pillar sides.

INSTALLATION

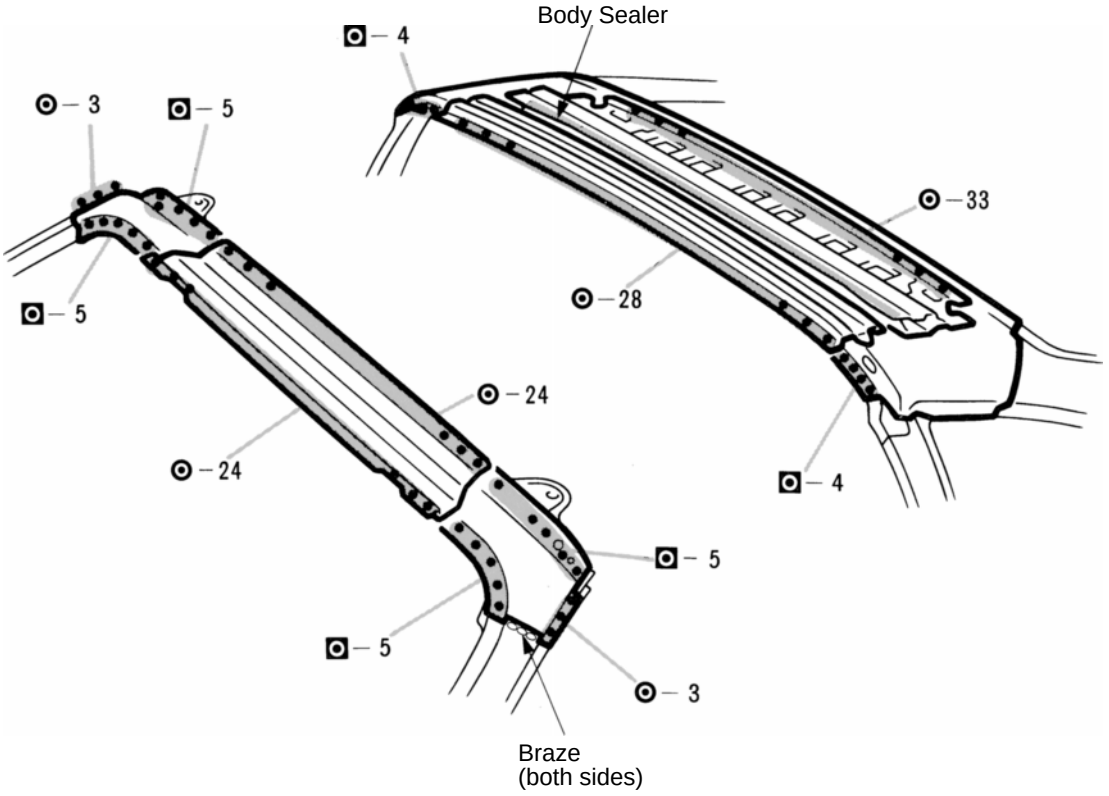

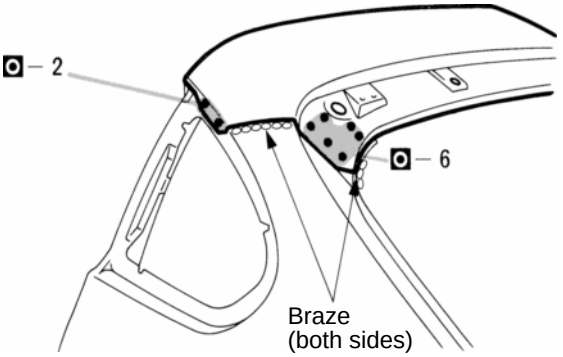

1. Before temporarily installing the new parts, apply body sealer to the windshield header panel, roof panel reinforcement and back door opening frame.

HINT:

1) Apply just enough sealer for the new parts to make contact.

2) For other sealing points, refer to Section AR.

2. Braze the front body pillar and quarter panel connection.

HINT: Before performing these operations, place a wet rag on the roof panel to protect it from damage.

FIT STANDARDS

After doors and the engine hood are installed, be sure to perform fit adjustment to prevent abnormal wind noise and ensure a good appearance.

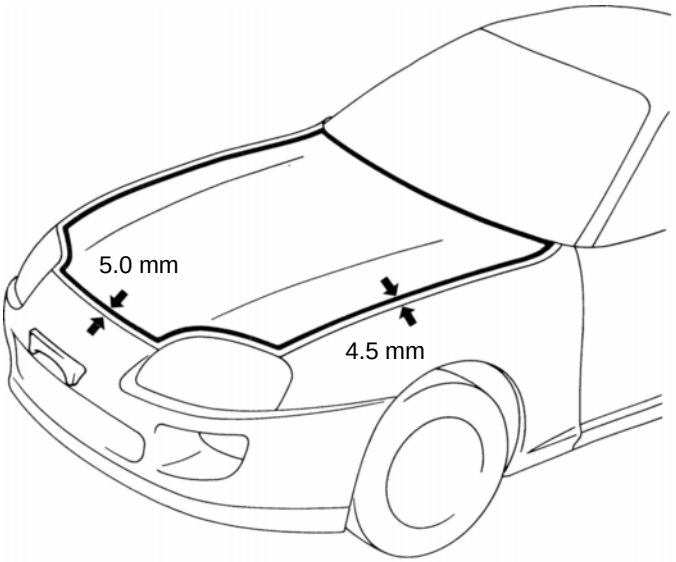

mm	in.
4.5	0.177
4.6	0.181
5.0	0.197
6.5	0.256
9.2	0.362

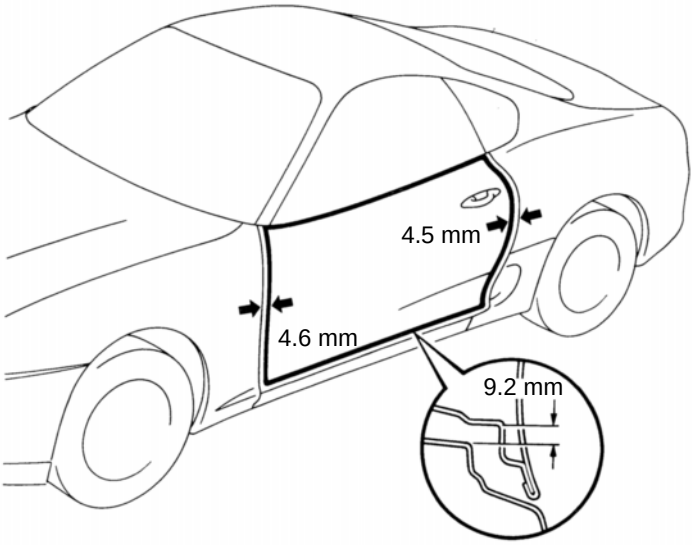

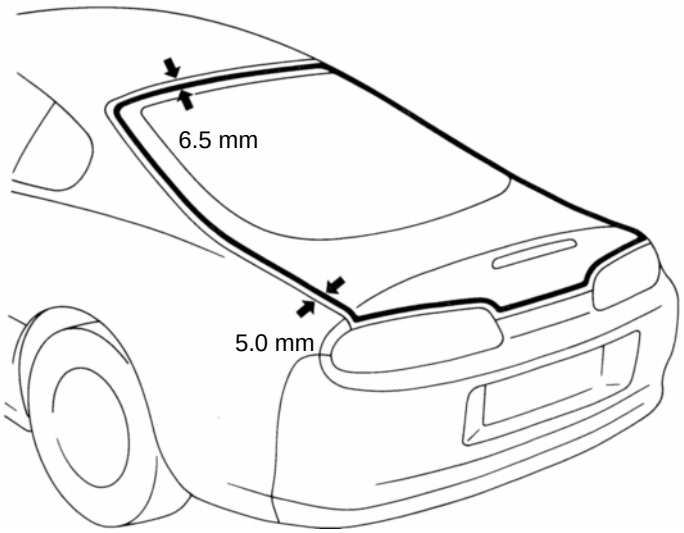

GENERAL INFORMATION

Anti–rust treatment is necessary before welding and before and after the painting process.

ANTI–RUST TREATMENT BEFORE WELDING

1. WELD–THROUGH PRIMER (SPOT SEALER) APPLICATION

For anti–corrosion measures, always apply the weld–through primer (spot sealer) to welding surfaces where the paint film has been removed.
HINT: Apply the weld–through primer (spot sealer) to that it does not ooze out from the joining surfaces.

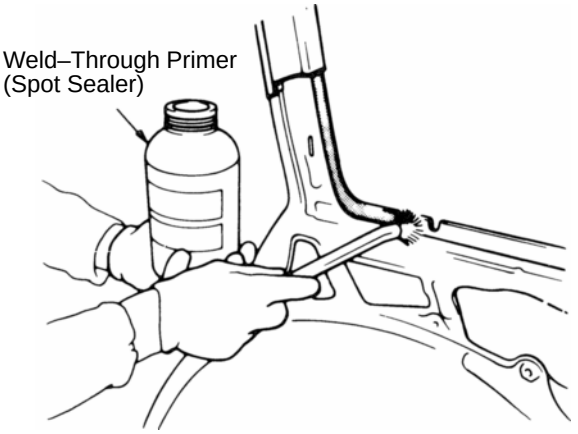

WELD–THROUGH PRIMER (SPOT SEALER) APPLICATION

ANTI–RUST TREATMENT BEFORE PAINTING PROCESS

1. BODY SEALER APPLICATION

For water–proofing and anti–corrosion measures, always apply the body sealer to the body panel seams and hems of the doors, etc.

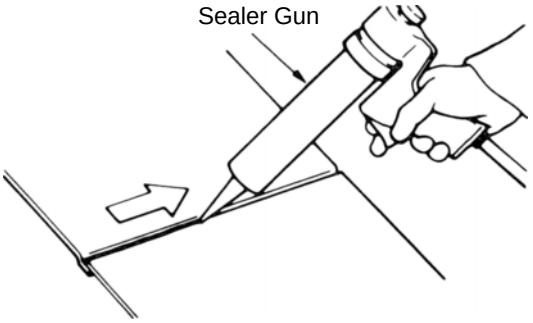

BODY SEALER APPLICATION

2. UNDERCOAT APPLICATION

To prevent corrosion and protect the body from damage by flying stones, always apply sufficient undercoat to the bottom surface of the under body and inside of the wheel housings.

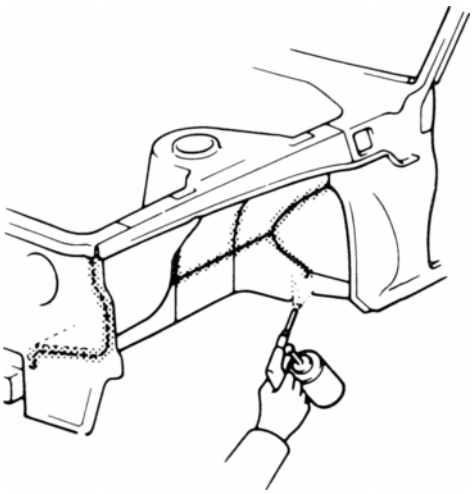

UNDERCOAT APPLICATION

ANTI–RUST TREATMENT AFTER PAINTING PROCESS

1. ANTI–RUST AGENT (WAX) APPLICATION

To preserve impossible to paint areas from corrosion, always apply sufficient anti–rust agent (wax) to the inside of the hemming areas of the doors and hoods, and around the hinges, or the welded surfaces inside the boxed cross–section structure of the side member, body pillar, etc.

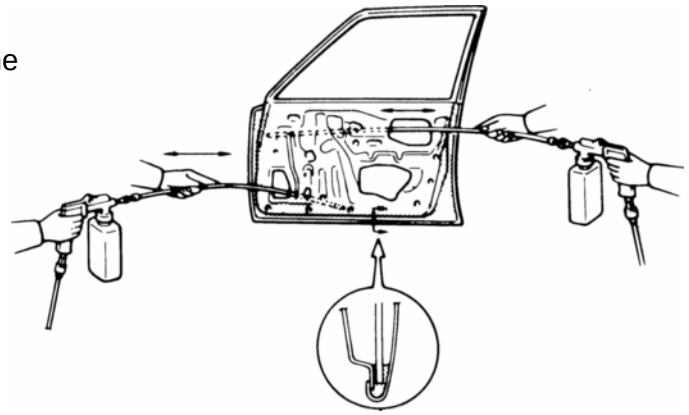

ANTI–RUST AGENT (WAX) APPLICATION

REFERENCE: ANTI–RUST TREATMENT BY PAINTING

Painting prevents corrosion and protects the sheet metal from damage. In this section, anti–chipping paint only for anti–corrosion purpose is described.

1. ANTI–CHIPPING PAINT

To prevent corrosion and protect the body from damage by flying stones, etc., apply anti–chipping paint to the rocker panel, wheel arch areas, valance panel, etc.

HINT:

Depending on the model or the application area, there are cases where the application of anti–chipping paint is necessary before the second coat or after the top coat.

- Apply the anti–chipping paint after the top coat.

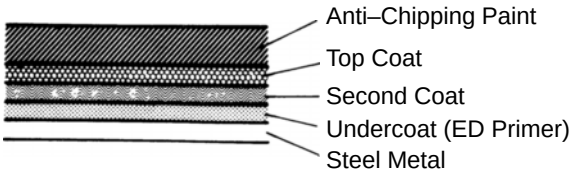

- Apply the anti–chipping paint before the second coat.

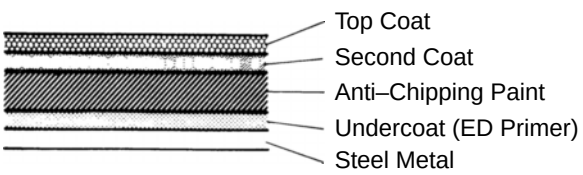

BODY PANEL SEALING AREAS

HINT:

1. *Prior to applying body sealer, clean the area with a rag soaked in a grease, wax and silicone remover.*
2. *If weld through primer was used, first wipe off any excess and coat with anti–corrosion primer before applying body sealer.*
3. *Wipe off excess body sealer with a rag soaked in a grease, wax and silicone remover.*
4. *If body sealer is damaged by peeling, cracks, etc., be sure to repair as necessary.*

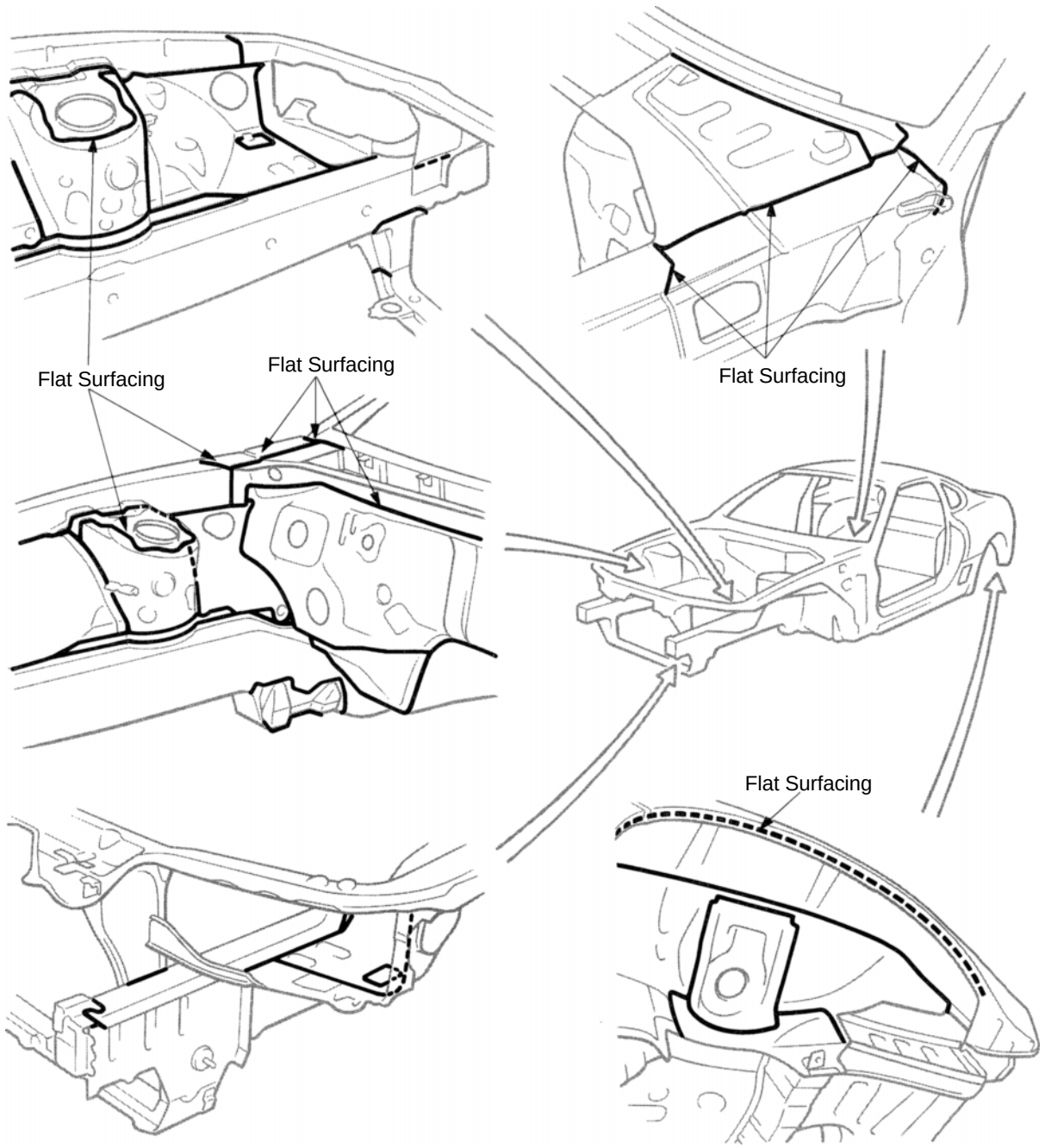

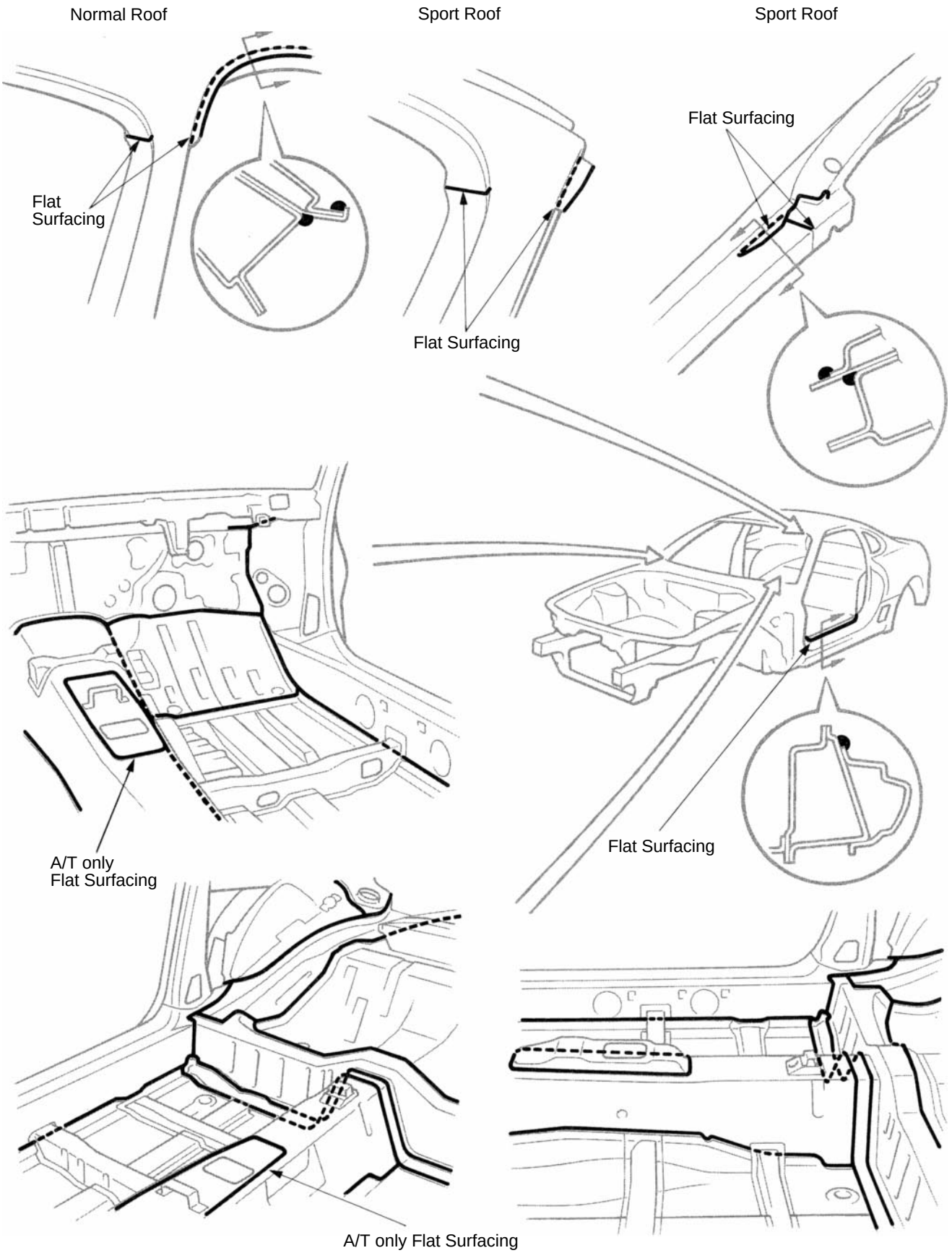
Normal Roof
Sport Roof
Sport Roof
Flat
Surfacing
Flat Surfacing
Flat Surfacing
A/T only
Flat Surfacing
Flat Surfacing
A/T only Flat Surfacing

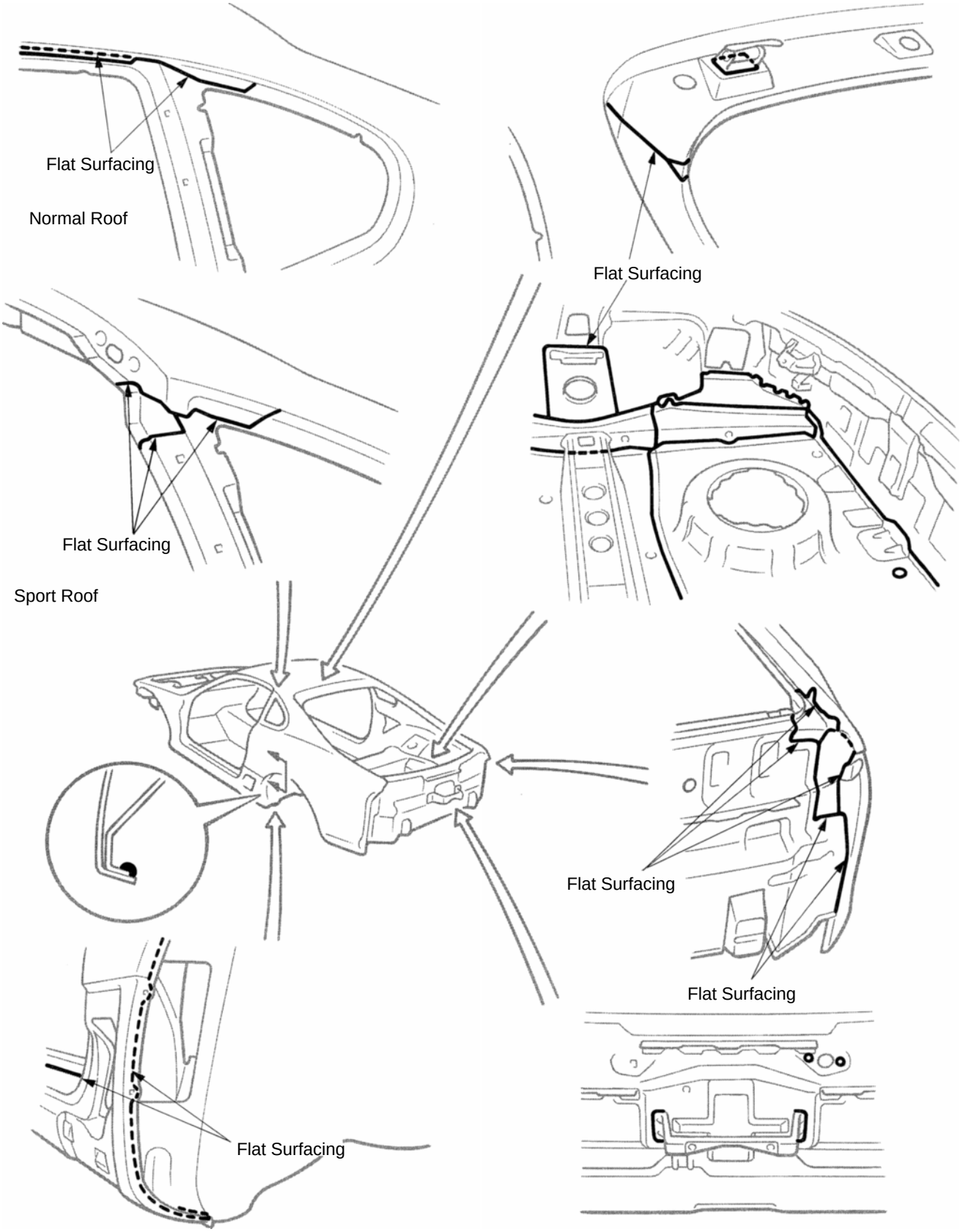
Flat Surfacing
Normal Roof
Flat Surfacing
Flat Surfacing
Sport Roof
Flat Surfacing
Flat Surfacing
Flat Surfacing

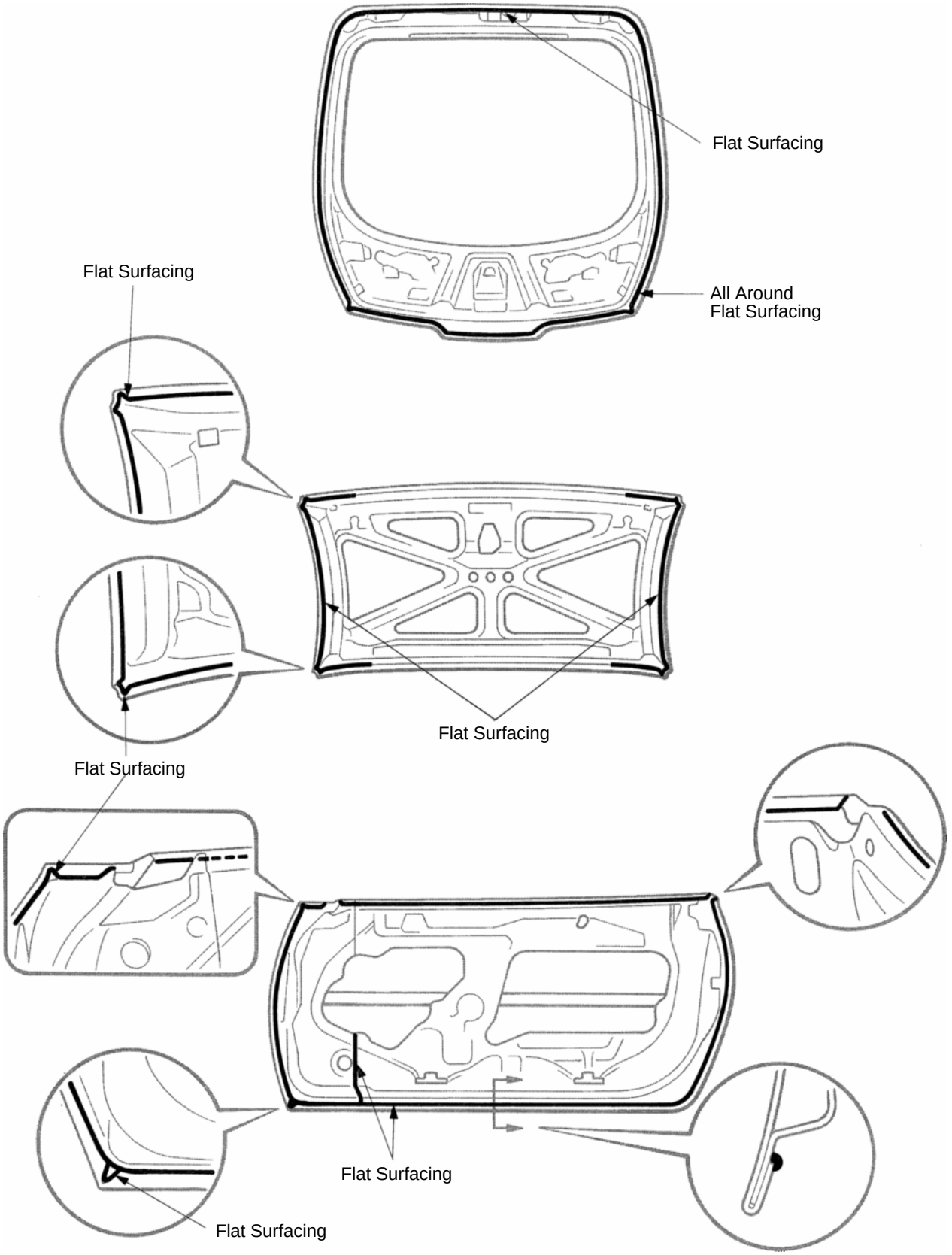
Flat Surfacing
All Around
Flat Surfacing
Flat Surfacing
Flat Surfacing
Flat Surfacing
Flat Surfacing
Flat Surfacing

BODY PANEL UNDERCOATING AREAS

HINT:

1. *First wipe off any dirt, grease or oil with a rag soaked in a grease, wax and silicone remover.*
2. *Cover the surrounding areas with masking paper to avoid coating unnecessary areas. If other areas are accidently coated, wipe off the coating immediately.*
3. *Apply the first coating of undercoat to all welded areas and panel joints, then apply a second coat over the entire area.*
4. *Do not coat parts which become hot, such as the tailpipe, or moving parts, such as the propeller shaft.*
5. *Besides the locations described below, apply undercoating to all weld points under the body to insure corrosion prevention.*
6. *Be sure to seal the edge of the flange of the member and bracket with undercoating.*
7. *If undercoat is damaged by peeling, cracks etc., be sure to repair as necessary.*

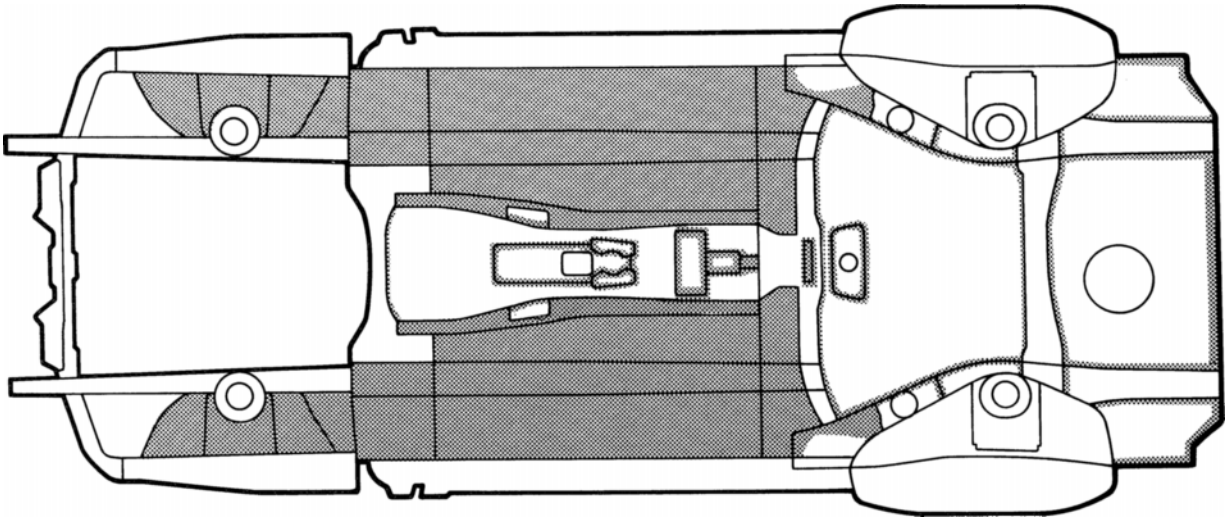

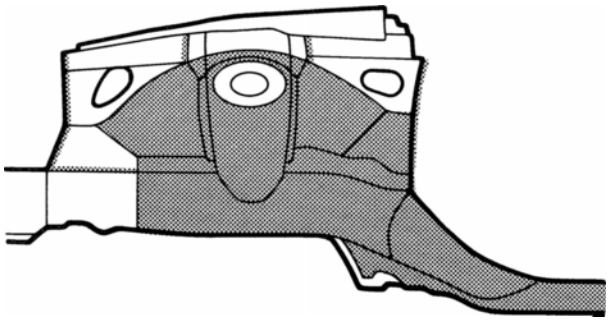

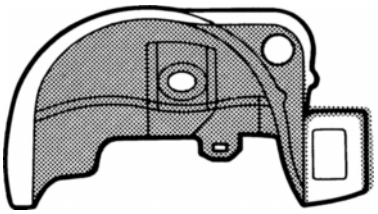

REFERENCE: Referring to the notes above, undercoating should be applied according to the specifications for your country.

BODY PANEL ANTI–RUST AGENT (WAX) APPLICATION AREAS

HINT:

1. *Whenever adjusting the doors and hoods, apply anti–rust agent (wax) around the hinges.*
2. *Even if partially repairing a part, apply anti–rust agent (wax) over the entire application area of the part.*
3. *Wipe off the anti–rust agent immediately with a rag soaked in a grease, wax and silicone remover, if accidently applied to other areas.*

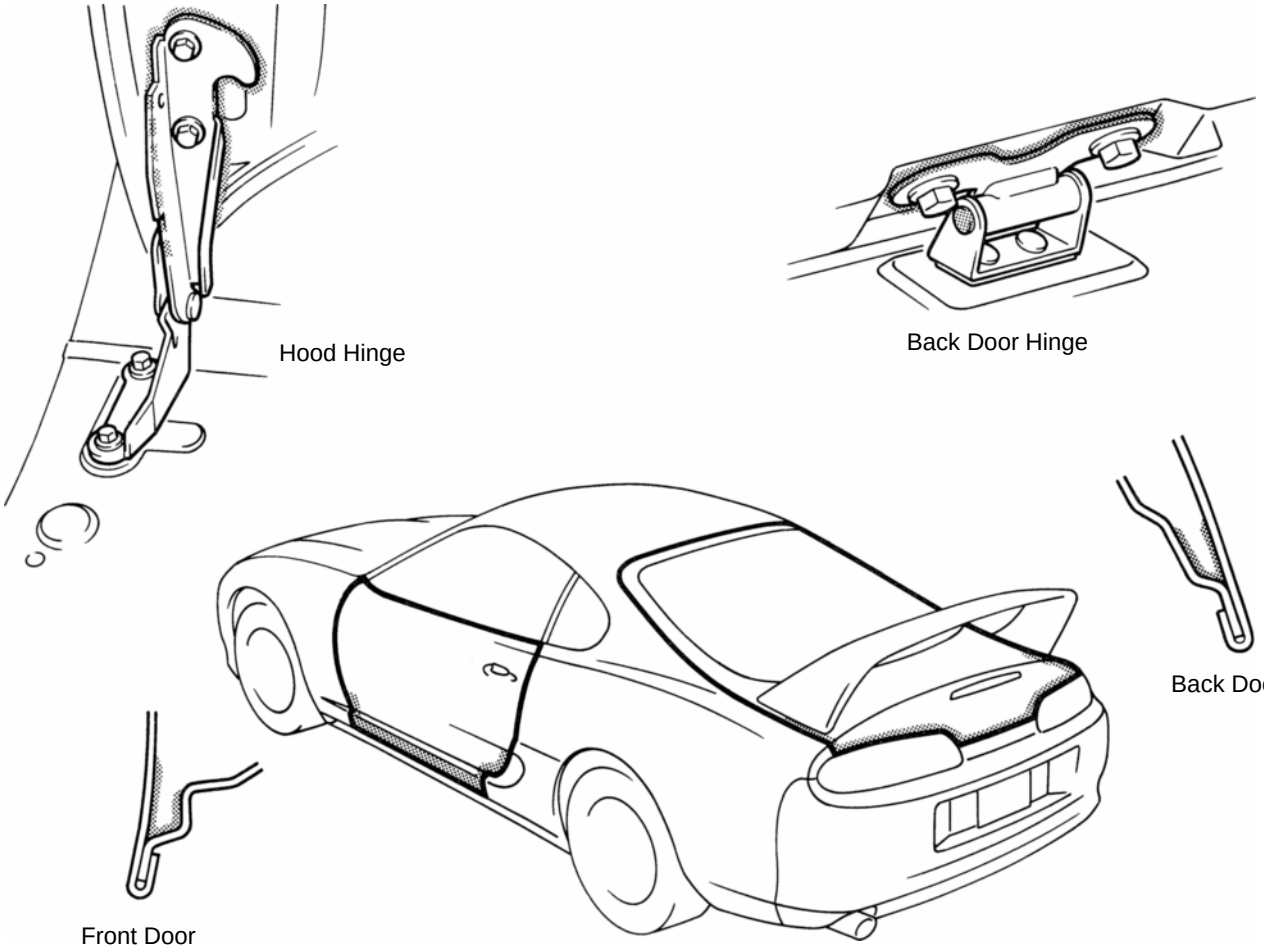

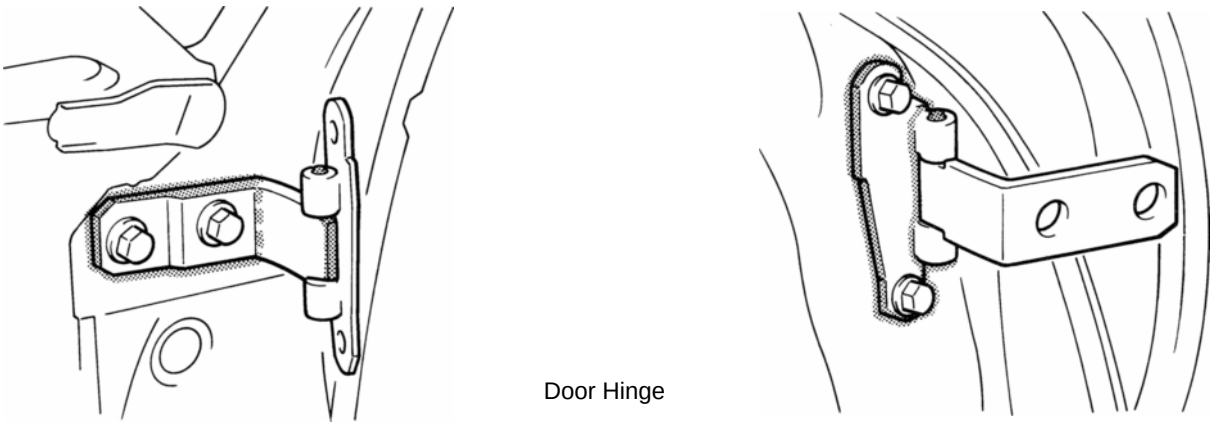

BODY PANEL ANTI–CHIPPING PAINT APPLICATION AREAS

HINT:

1. *Anti–chipping paint should be applied to some areas before the second coat and to others after the top coat.*
2. *If other areas are accidentally coated, wipe of the paint immediately with a rag soaked in a grease, wax and silicone remover.*

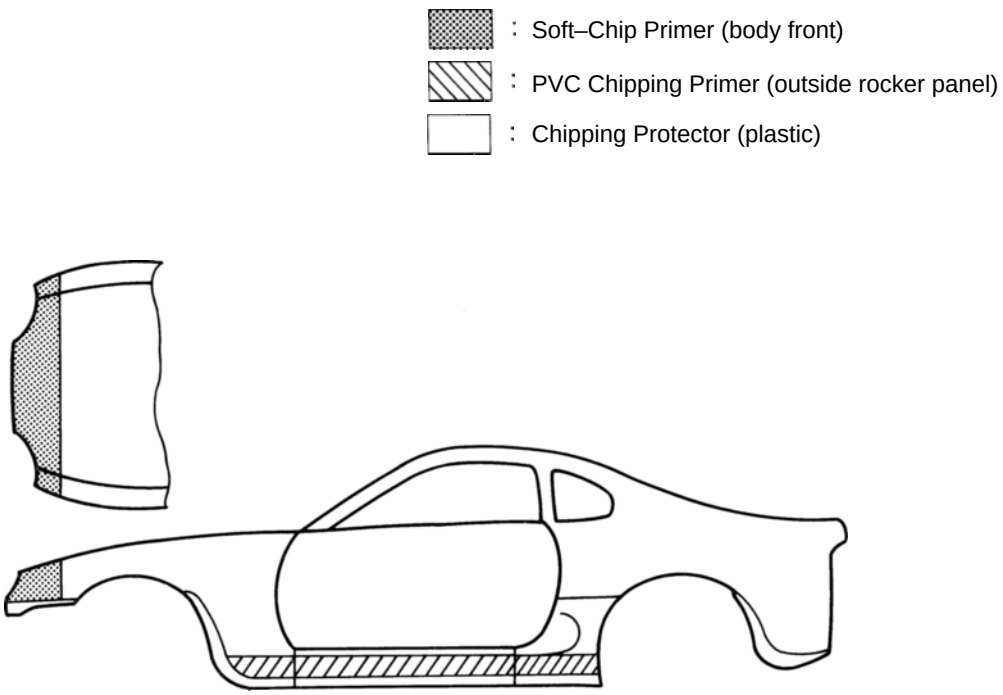

SILENCER SHEET INSTALLATION AREAS

Thickness of Asphalt Sheet

. . . . . 1.5 mm (0.059 in.)

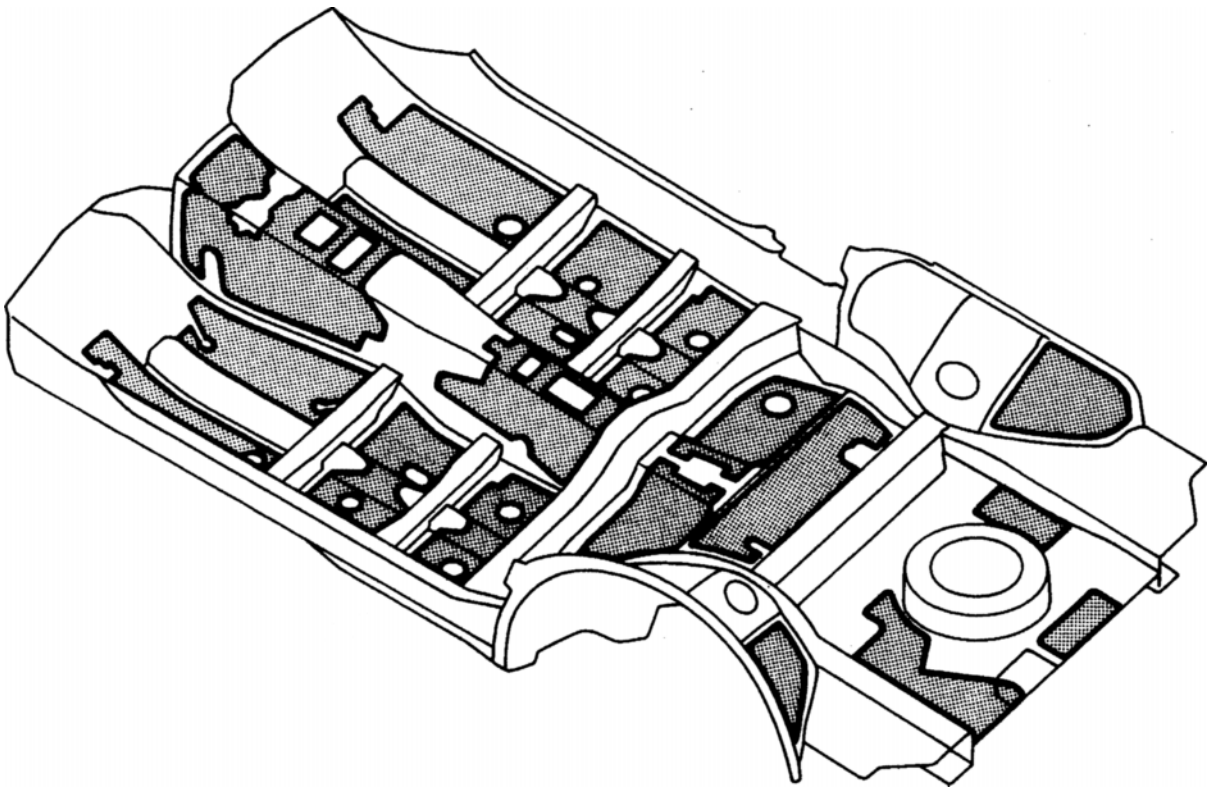

FOAMED MATERIAL APPLICATION AREAS

The sections shown in the figure below are filled with foamed material to provide noise insullation.
After repairing these sections or their peripheries, refill with foamed materials.
HINT:

1. *Use the service holes located on the reverse side of the body panel to refill with foamed materials.*
2. *When handling foamed material, follow the directions of the material's manufacturer.*



NORMAL ROOF

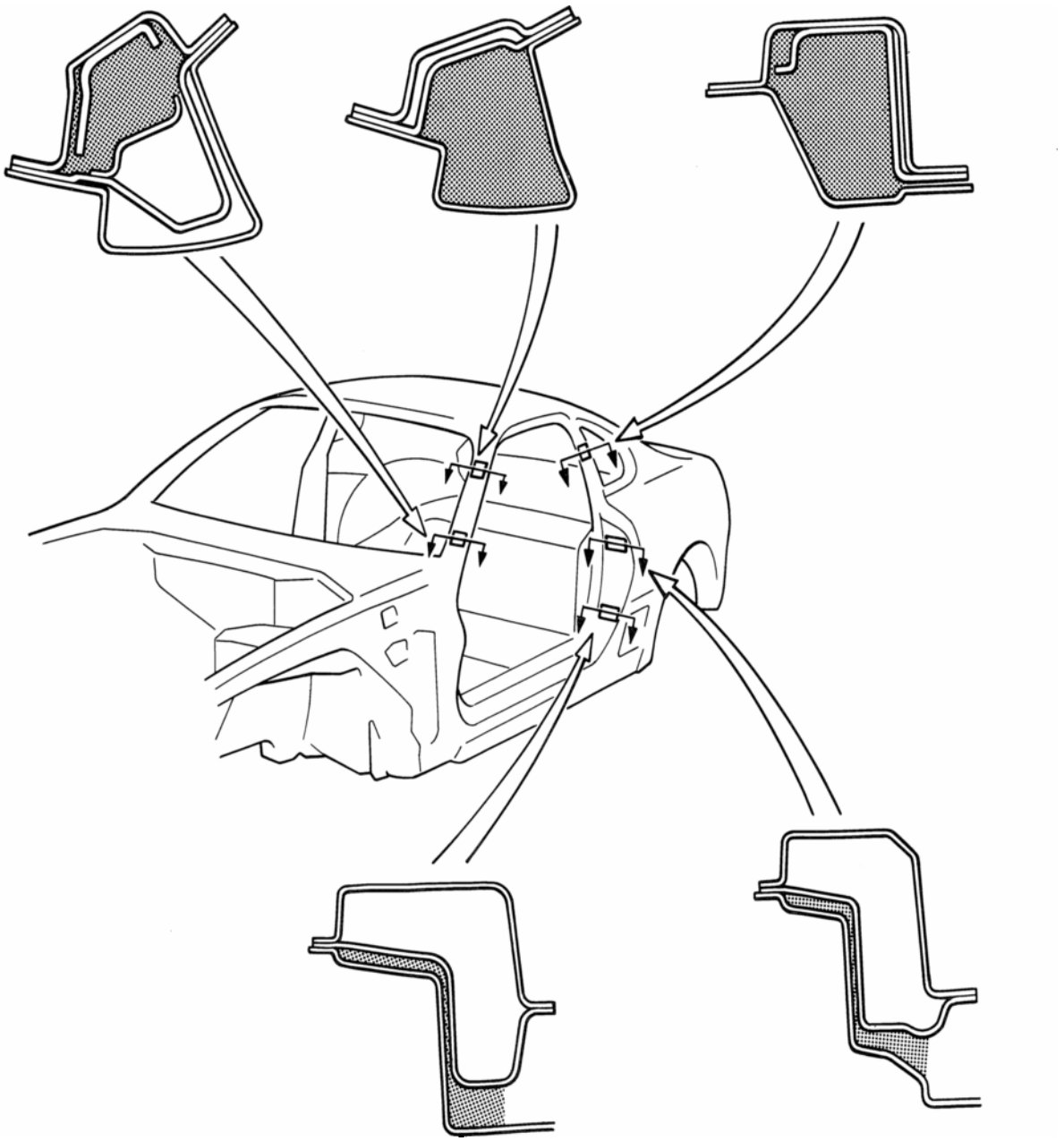

SPORT ROOF

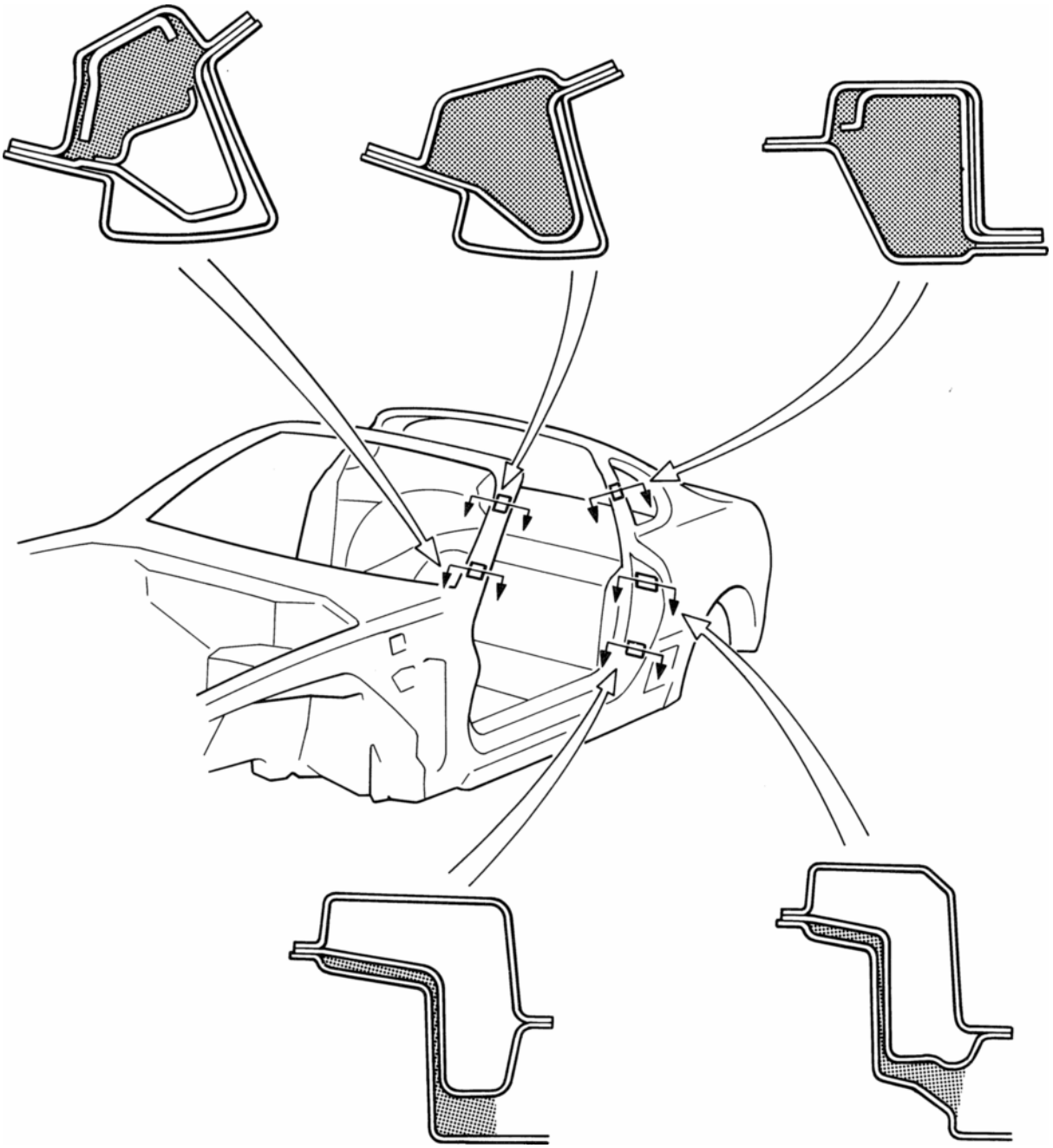

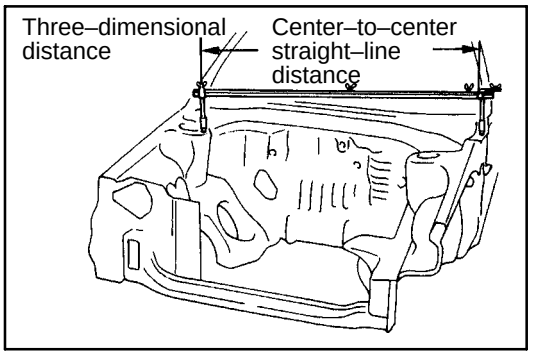

GENERAL INFORMATION

1. BASIC DIMENSIONS

(a) There are two types of dimensions in the diagram. (Three–dimensional distance)

- Straight–line distance between the centers of two measuring points.

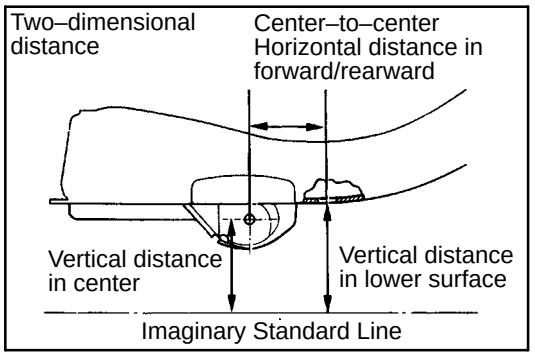

(Two–dimensional distance)

- Horizontal distance in forward/rearward between the centers of two measuring points.
- The height from an imaginary standard line.

(b) In cases in which only one dimension is given, left and right are symmetrical.

(c) The dimensions in the following drawing indicate actual distance. Therefore, please use the dimensions as a reference.

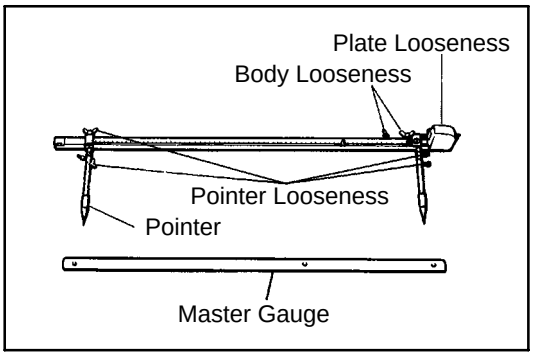

2. MEASURING

(a) Basically, all measurements are to be done with a tracking gauge. For portions where it is not possible to use a tracking gauge, a tape measure should be used.

(b) Use only a tracking gauge that has no looseness in the body, measuring plate, or pointers.

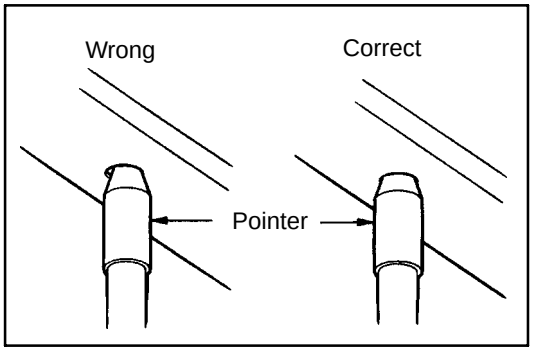

HINT:

1. *The height of the left and right pointers must be equal.*
2. *Always calibrate the tracking gauge before measuring or after adjusting the pointer height.*
3. *Take care not to drop the tracking gauge or otherwise shock it.*
4. *Confirm that the pointers are securely in the holes.*

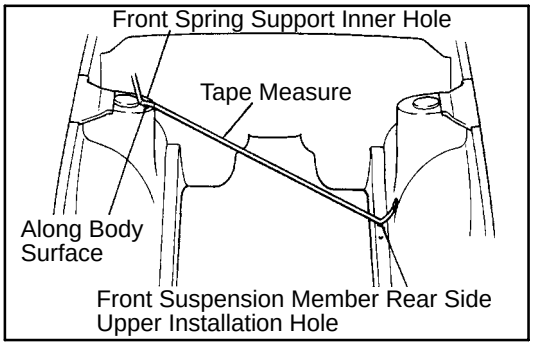

(c) When using a tape measure, avoid twists and bends in the tape.

(d) When tracking a diagonal measurement from the front spring support inner hole to the suspension member upper rear installation hole, measure along the front spring support panel surface.

BODY DIMENSION DRAWINGS

ENGINE COMPARTMENT

(Three–Dimensional Distance)

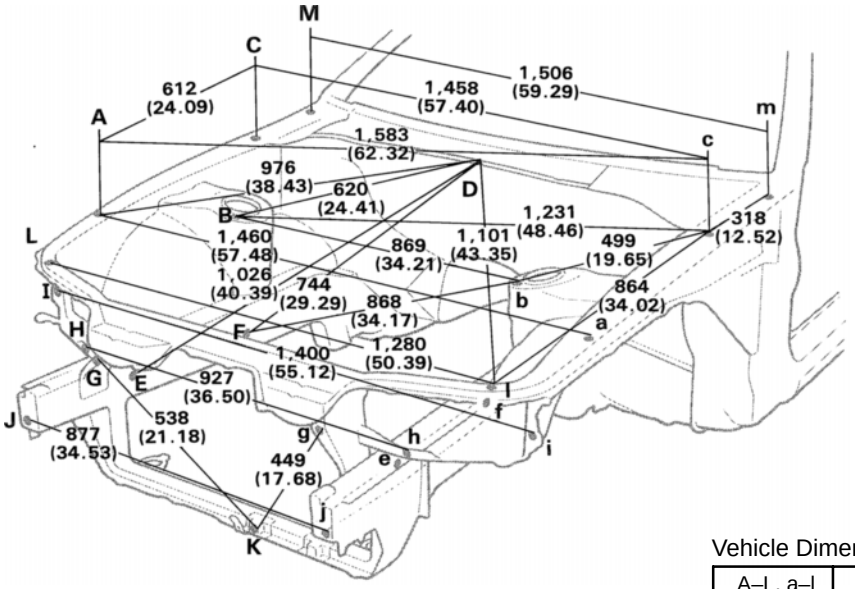

Vehicle Dimensions

A–L, a–l	C–l, c–L	G–g
263 (10.35)	1,617 (63.66)	652 (25.67)

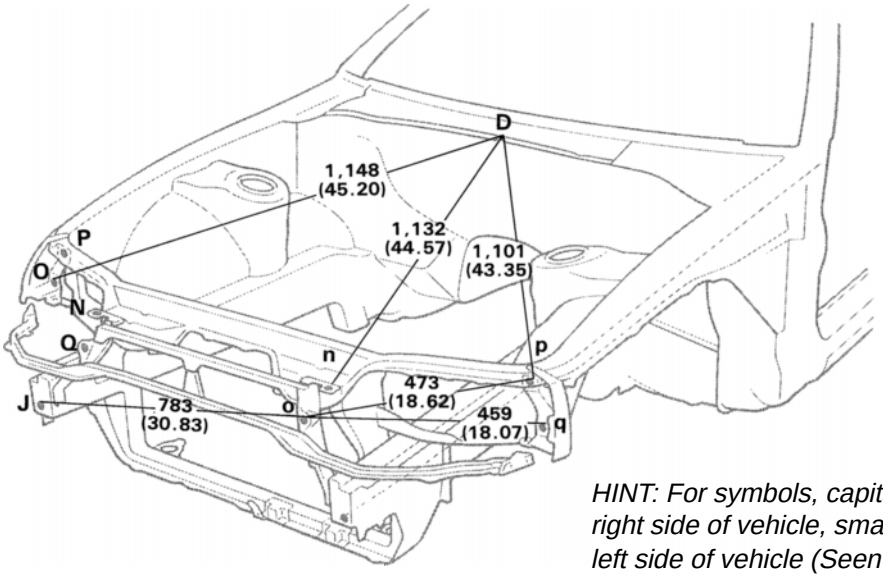

HINT: For symbols, capital letters indicate right side of vehicle, small letters indicate left side of vehicle (Seen from rear).

NO8903
NO8971

mm (in.)

Symbol	Name	Hole dia.	Symbol	Name	Hole dia.
A, a	Front fender apron standard hole	10 (0.39)	J, j	Front side member reinforcement standard hole	8 (0.31)
B, b	Front spring support hole–front	11 (0.43)	K	Cooling fan installation nut	6 (0.24) nut
C, c	Cowl top side panel standard hole	10 (0.39)	L, l	Front fender installation nut	6 (0.24) nut
D	Cowl top panel center mark	—	M, m	Hood hinge installation nut	8 (0.31) nut
E, e	Front side member working hole	18 (0.71)	N, n	Headlight installation nut	6 (0.24) nut
F, f	Front side member standard hole	13 (0.51)	O, o	Headlight installation hole	14x10.6 (0.55x0.42)
G, g	Radiator duct installation hole	7.2 (0.283)	P, p	Headlight installation hole	14x9 (0.55x0.35)
H, h	Radiator support apron brace standard hole	10 (0.39)	Q, q	Headlight installation hole	14x9 (0.55x0.35)
I, i	Apron fender side extension standard hole	9 (0.35)	—	—	—

BODY OPENING AREAS (Side View: Normal Roof)

(Three–Dimensional Distance)

NO8904

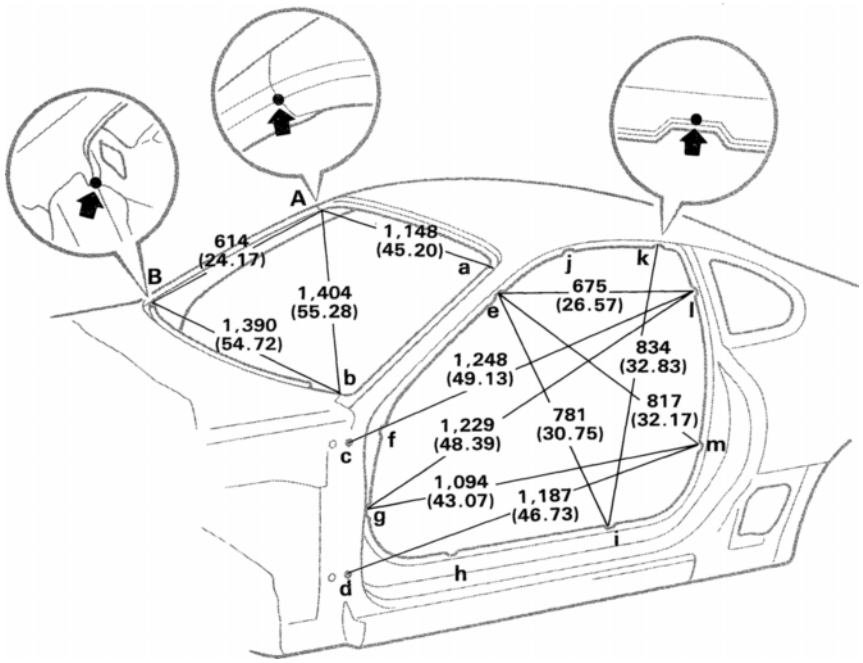

HINT: For symbols, capital letters indicate right side of vehicle, small letters indicate left side of vehicle (Seen from rear).

Vehicle Dimensions Left↔ Right

E–e	F–f	G–g	H–h	I–i
1,234 (48.58)	1,488 (58.58)	1,506 (59.29)	1,510 (59.45)	1,510 (59.45)

J–j	K–k	L–l	M–m
1,094 (43.07)	1,090 (42.91)	1,260 (49.61)	1,530 (60.24)

E–g or e–G	E–h or e–H	E–i or e–I	E–l or e–L	G–l or g–L
1,531 (60.28)	1,546 (60.87)	1,573 (61.93)	1,418 (55.83)	1,846 (72.68)

G–m or g–M	H–i or h–I	I–k or i–K	I–l or i–L	L–m or l–M
1,871 (73.66)	1,602 (63.07)	1,530 (60.24)	1,566 (61.65)	1,465 (57.68)

mm (in.)

Symbol	Name	Hole dia.	Symbol	Name	Hole dia.
A, a	Roof panel/ Front body pillar adjoining portion	—	H, h	Rocker panel reinforcement adjoining portion mark	—
B, b	Cowl top panel/ Front body pillar adjoining portion	—	I, i	Rocker panel reinforcement adjoining portion mark	—
C, c	Front door hinge installation nut	10 (0.39)nut	J, j	Roof side rail adjoining portion mark	—
D, d	Front door hinge installation nut	10 (0.39)nut	K, k	Roof side rail adjoining portion mark	—
E, e	Front body pillar adjoining portion mark	—	L, l	Quarter panel adjoining portion mark	—
F, f	Front body pillar adjoining portion mark	—	M, m	Quarter panel adjoining portion mark	—
G, g	Front body pillar adjoining portion mark	—	—	—	—

BODY OPENING AREAS
(Side View: Sport Roof)

(Three–Dimensional Distance)

HINT: For symbols, capital letters indicate right side of vehicle, small letters indicate left side of vehicle (Seen from rear).

E–g or e–G	E–h or e–H	E–i or e–I	E–l or e–L	G–l or g–L
1,545 (60.83)	1,548 (60.94)	1,538 (60.56)	1,333 (52.48)	1,846 (72.68)

J–k or j–K
568 (22.36)

G–m or g–M	H–i or h–I	I–l or i–L	J–k or j–K	L–m or l–M
1,871 (73.66)	1,602 (63.07)	1,566 (61.65)	1,227 (48.31)	1,.465 (57.68)

Vehicle Dimensions Left↔ Right

E–e	F–f	G–g	H–h	I–i
1,148 (45.20)	1,488 (58.58)	1,506 (59.29)	1,510 (59.45)	1,510 (59.45)

J–j	K–k	L–1	M–m
1,095 (43.11)	1,081 (42.56)	1,260 (49.61)	1,530 (60.24)

mm(in.)

Symbol	Name	Hole dia.	Symbol	Name	Hole dia.
A, a	Roof panel/ Front body pillar adjoining portion	—	H, h	Rocker panel reinforcement adjoining portion mark	—
B, b	Cowl top panel/ Front body pillar adjoining portion	—	I, i	Rocker panel reinforcement adjoining portion mark	—
C, c	Front door hinge installation nut	10 (0.39)nut	J, j	Weatherstrip installation hole	7.3 (0.29)
D, d	Front door hinge installation nut	10 (0.39)nut	K, k	Weatherstrip installation hole	7.3 (0.29)
E, e	Front body pillar adjoining portion mark	—	L, l	Quater panel adjoining portion mark	—
F, f	Front body pillar adjoining portion mark	—	M, m	Quater panel adjoining portion mark	—
G, g	Front body pillar adjoining portion mark	—	—	—	—

NO8905

BODY OPENING AREAS
(Rear View: Normal Roof)

(Three–Dimensional Distance)

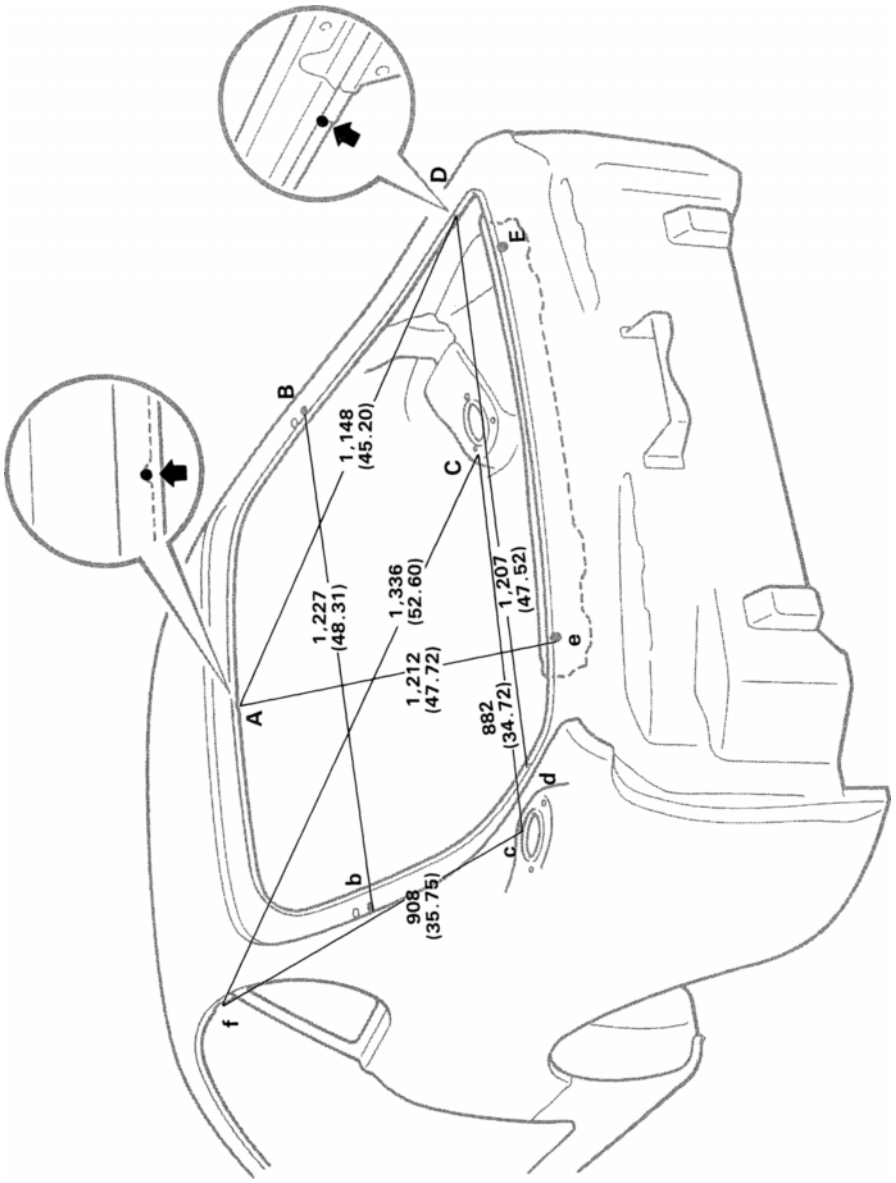

HINT: For symbols, capital letters indicate right side of vehicle, small letters indicate left side of vehicle (Seen from rear).

mm (in.)

Symbol	Name	Hole dia.	Symbol	Name	Hole dia.
A	Back door opening frame center mark	—	D, d	Back door opening trough / Quater panel adjoining portion	—
B, b	Damper stay installation hole–rear	8 (0.31)	E, e	Lower back panel reinforcement standard hole	10 (0.39)
C, c	Rear spring support hole–inner, front	9 (0.35)	F, f	Roof side rail adjoining portion mark	—

NO8906

BODY OPENING AREAS
(Rear View: Sport Roof)

(Three–Dimensional Distance)

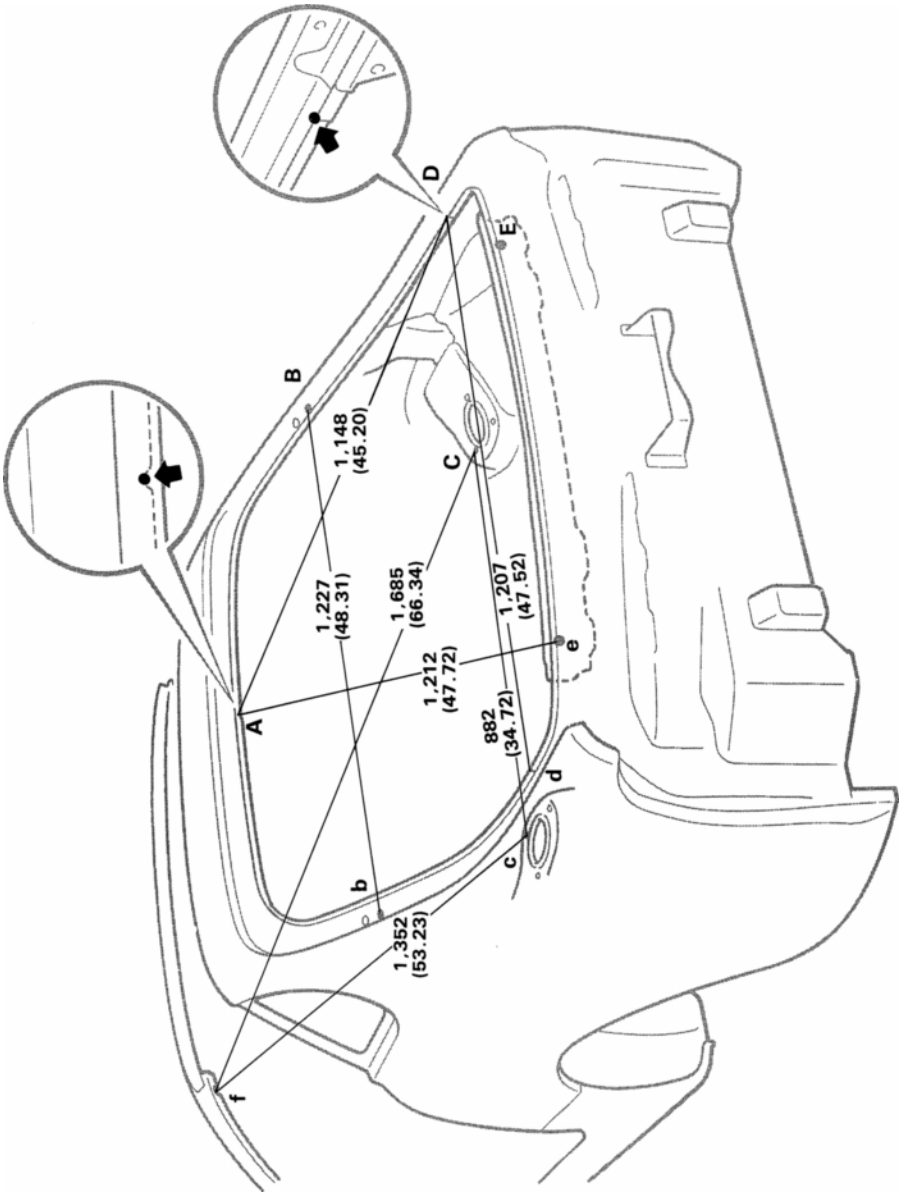

HINT: For symbols, capital letters indicate right side of vehicle, small letters indicate left side of vehicle (Seen from rear).

mm (in.)

Symbol	Name	Hole dia.	Symbol	Name	Hole dia.
A	Back door opening frame center mark	—	D, d	Back door opening trough / Quarter panel adjoining portion	—
B, b	Damper stay installation hole–rear	8 (0.31)	E, e	Lower back panel reinforcement standard hole	10 (0.39)
C, c	Rear spring support hole–inner, front	9 (0.35)	F, f	Front body pillar adjoining portion mark	—

UNDER BODY

(Three–Dimensional Distance)

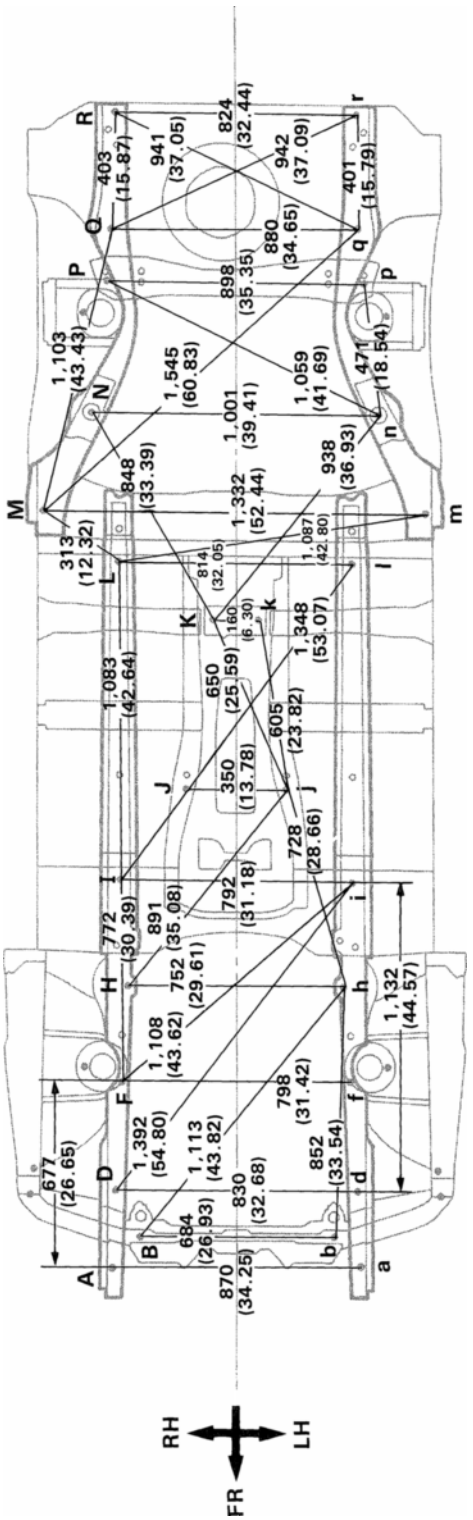

Symbol	Name	Hole dia.	Symbol	Name	Hole dia.
A, a	Font side member standard hole	7 (0.28)	L, l	Front floor reinforcement standard hole	10 (0.39)
B, b	Font crossmember working hole	9 (0.35)	M, m	Rear floor side member standard hole	18 (0.71)
D, d	Font side member standard hole	18 (0.71)	N, n	Rear suspension member installation nut	14 (0.55)nut
F, f	Font suspension crossmember installation hole	13 (0.51)	P, p	Suspension member bracket installation nut–front, outer	10 (0.39)nut
H, h	Front suspension crossmember installation nut	14 (0.55) nut	Q, q	Rear floor side member rear standard hole	18 (0.71)
I, i	Front side member standard hole	18 (0.71)	R	Tank band installation nut	10 (0.39)nut
J, j	Engine rear mounting member installation nut–front	10 (0.39) nut	r	Transport hook installation nut	12 (0. 47)nut
K, k	Propeller shaft center support bearing installation nut	10(0.39) nut	—	—	—

NO8908

UNDER BODY (Cont'd)

(Two–Dimensional Distance)

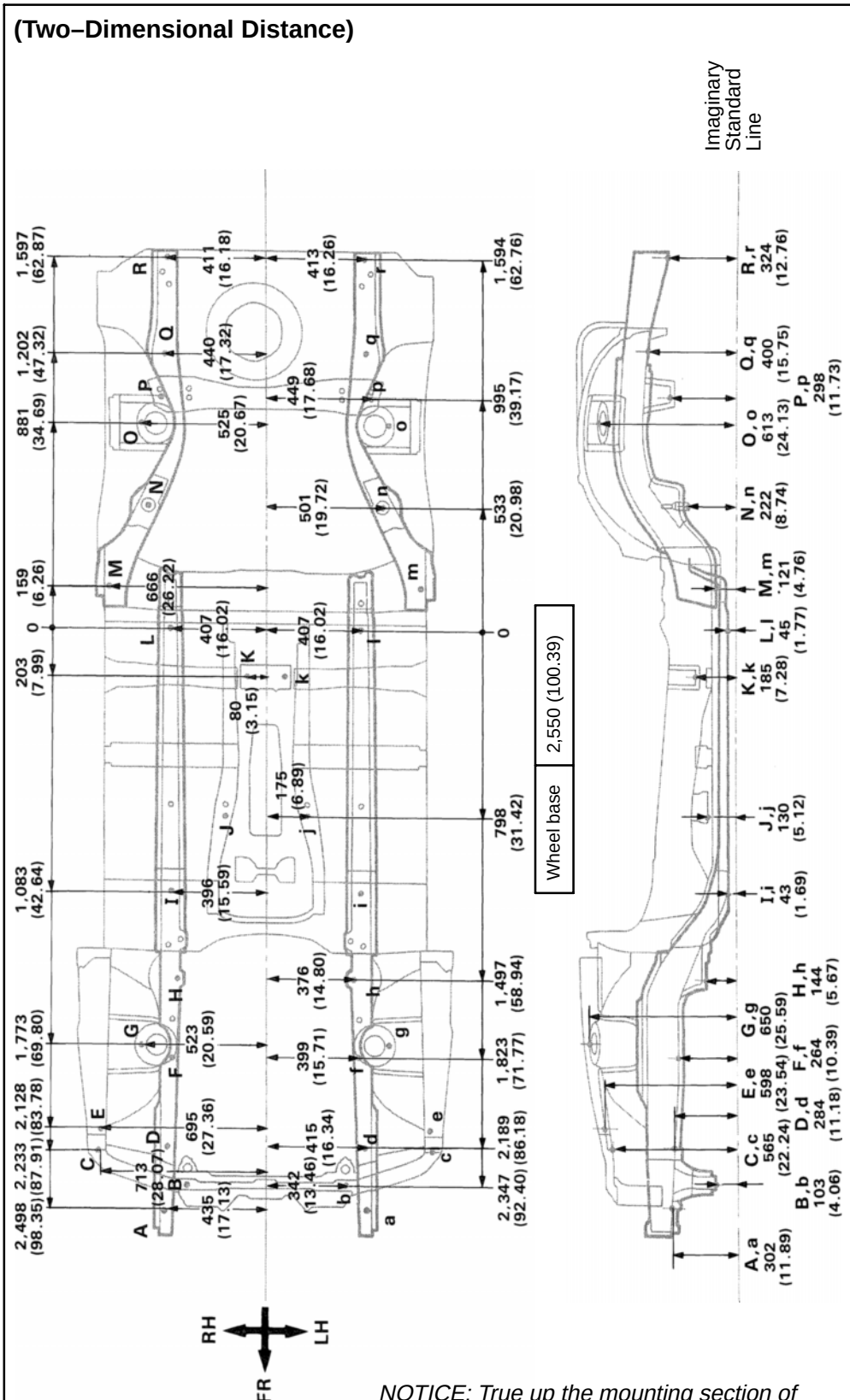

Symbol	Name	Hole dia.	Symbol	Name	Hole dia.
A, a	Front side member standard hole	7 (0.28)	K, k	Propeller shaft center support bearing installation nut	10 (0.39)nut
B, b	Front crossmember working hole	9 (0.35)	L, l	Front floor reinforcement standard bole	10 (0.39)
C, c	Front airbag sensor installation hole	9 (0.35)	M, m	Rear floor side member standard hole	18 (0.71)
D, d	Front side member standard bole	18 (0.71)	N, n	Rear suspension member installation nut	14 (0.55)nut
E, e	Front airbag sensor installation nut	8 (0.31) nut	O, o	Rear spring support hole–outer	9 (0.35)
F, f	Front suspension crossmember installation hole	13 (0.51)	P, p	Suspension member bracket installation nut–front, outer	10 (0.39)nut
G, g	Front spring support hole–outer	13 (0.51)	Q, q	Rear floor side member rear standard hole	18 (0.71)
H, h	Front suspension crossmember installation nut	14 (0.55) nut	R	Tank band installation nut	10 (0.39)nut
I, i	Front side member standard hole	18 (0.71)	r	Transport hook installation nut	12 (0.47)nut
J, j	Engine rear mounting member installation nut–front	10 (0.39) nut	—	—	—

NOTICE: True up the mounting section of the front airbag sensor very carefully and accurately so that the sensor can be mounted at the correct angle.

FRONT SUSPENSION CROSSMEMBER

(Three–Dimensional Distance)

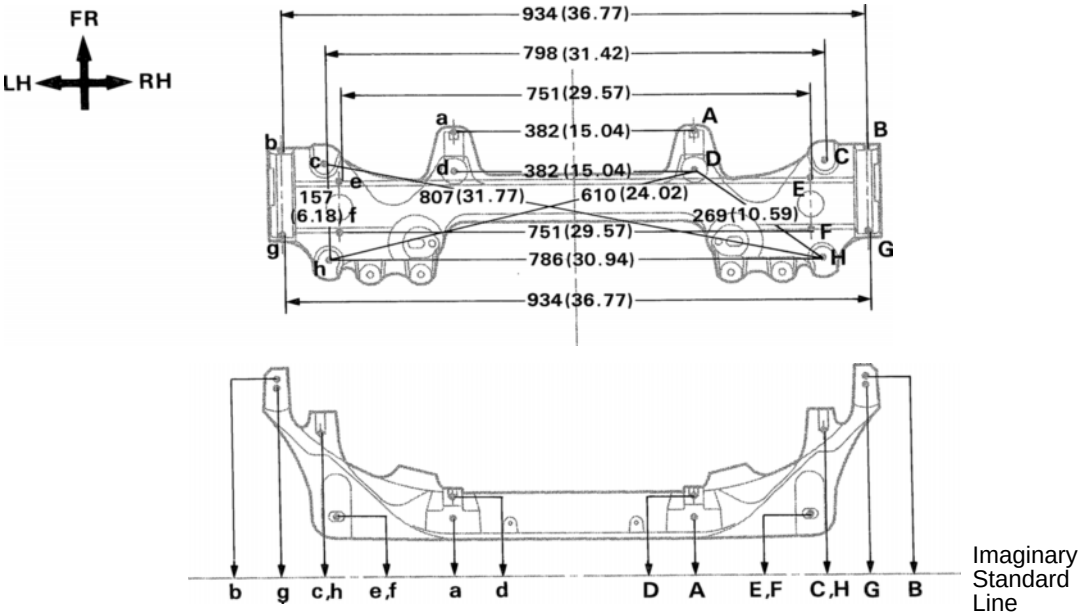

(Two–Dimensional Distance)

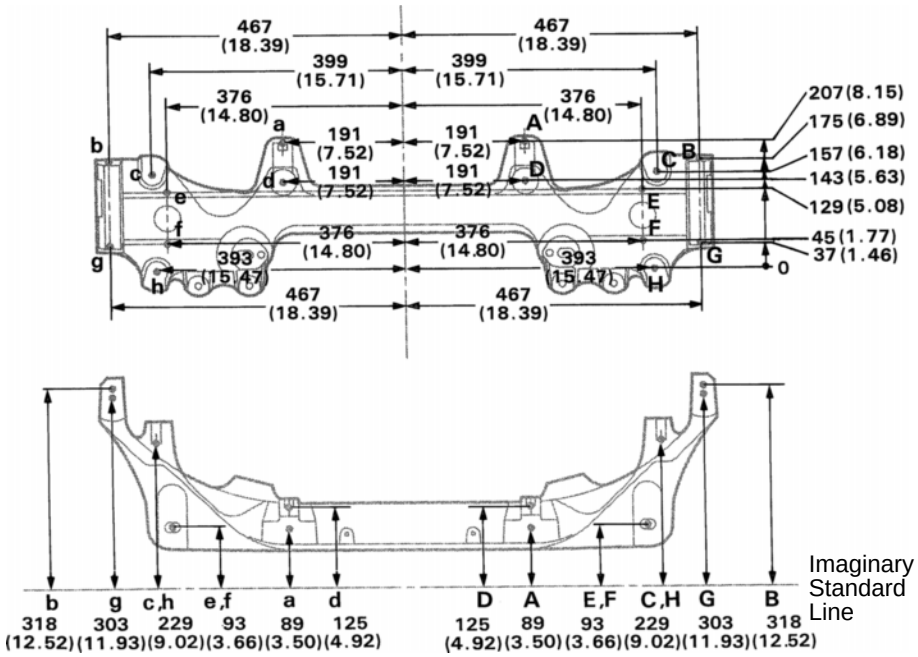

BO6850
BO6850

mm (in.)

Symbol	Name	Hole dia.	Symbol	Name	Hole dia.
A, a	Steering gear box installation hole front	12 (0.47)	E, e	Lower arm installation hole–front	25×16 (0.98×0.63)
B, b	Upper arm installation hole front	14 (0.55)	F, f	Lower arm installation hole rear	25×16 (0.98×0.63)
C, c	Suspension crossmember installation hole front–lower	15 (0.59)	G, g	Upper arm installation hole rear	14 (0.55)
D, d	Steering gear box installation hole–lower	12 (0.47)	H, h	Suspension crossmember installation hole rear–lower	RH 15×13 (0.59 x 0.51) LH 13 (0.51)

FRONT SUSPENSION CROSSMEMBER (Cont'd)

(Three–Dimensional Distance)

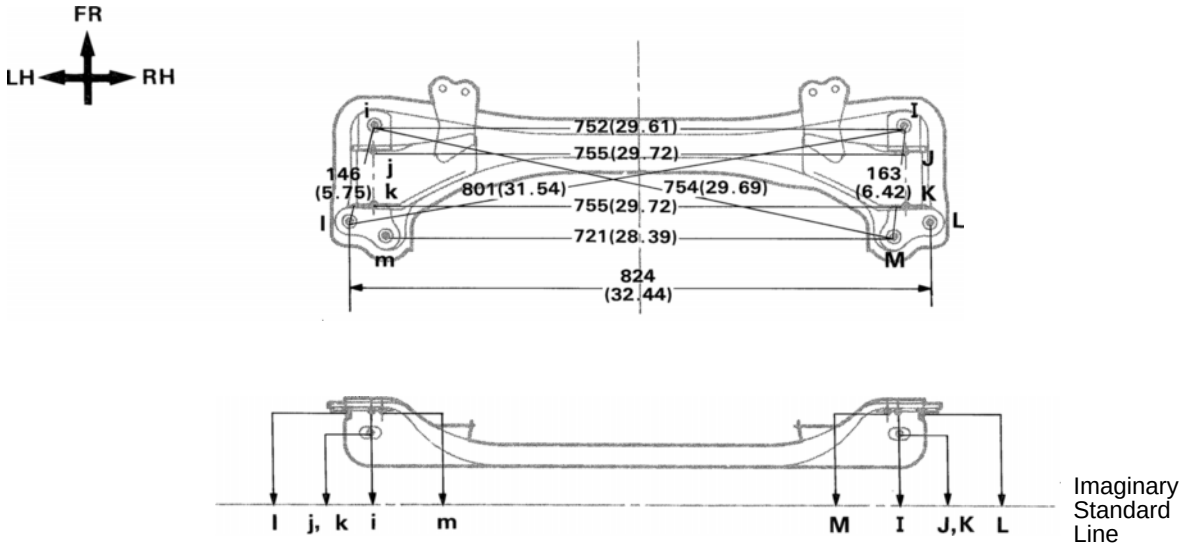

(Two–Dimensional Distance)

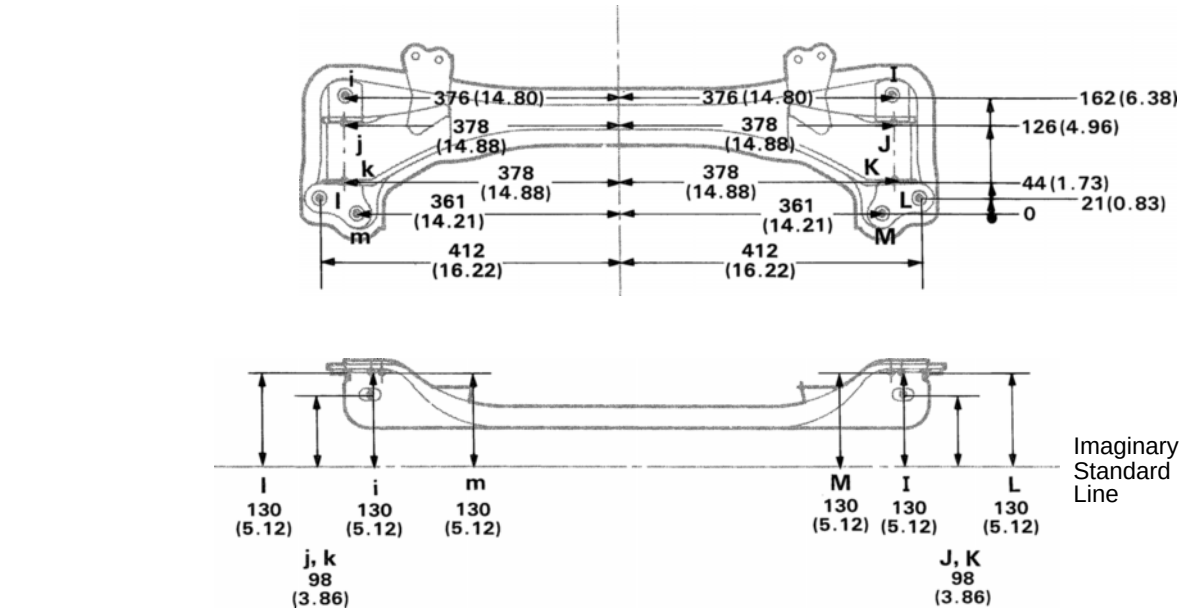

BO8851
BO6851

mm (in.)

Symbol	Name	Hole dia.	Symbol	Name	Hole dia.
I, i	Suspension crossmember installation hole front–lower	18 (0.71)	L, l	Suspension crossmember installation hole rear–lower	18 (0.71)
J, j	Lower arm installation hole–front	30×16 (1.18×0.63)	M, m	Suspension crossmember installation hole rear–lower	18 (0.71)
K, k	Lower arm installation hole rear	30×16 (1.18 x 0.63)	—	—	—

REAR SUSPENSION CROSSMEMBER

(Three–Dimensional Distance)

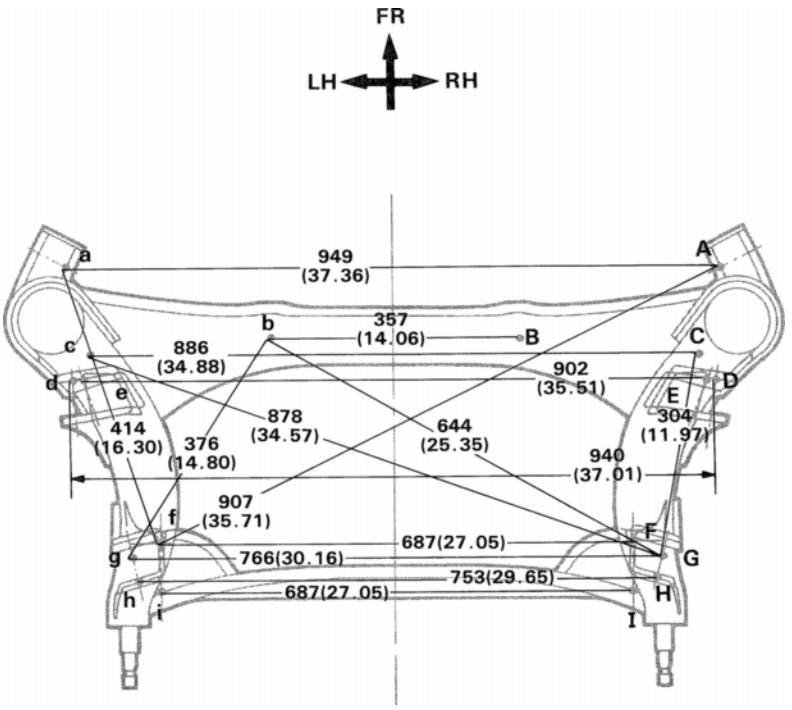

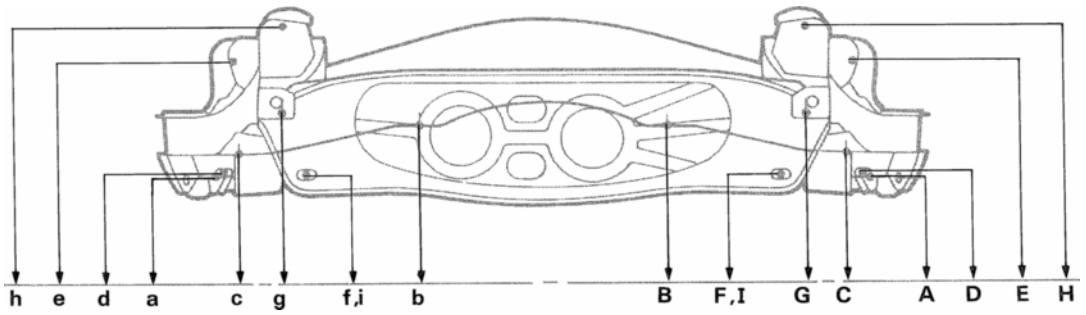

NO8909
NO8909

mm (in.)

Symbol	Name	Hole dia.	Symbol	Name	Hole dia.
A, a	Strut rod installation hole–inner	14.2 (0. 559)	F, f	No. 2 lower arm installation hole–front	26×14.2 (1.02×0.559)
B, b	Differential carrier installation nut	12 (0.47) nut	G, g	Rear suspension member standard hole	20 (0.79)
C, c	Rear suspension member standard hole	20 (0.79)	H, h	Upper arm installation hole–rear	14.2 (0.559)
D, d	No. 1 lower arm installation hole–front	26x 14.2 (1.02×0.559)	I, i	No. 2 lower arm installation hole–rear	26×14.2 (1.02×0.559)
E, e	Upper arm installation hole–front	14.2 (0.559)	—	—	—

REAR SUSPENSION CROSSMEMBER (Cont'd)

(Two–Dimensional Distance)

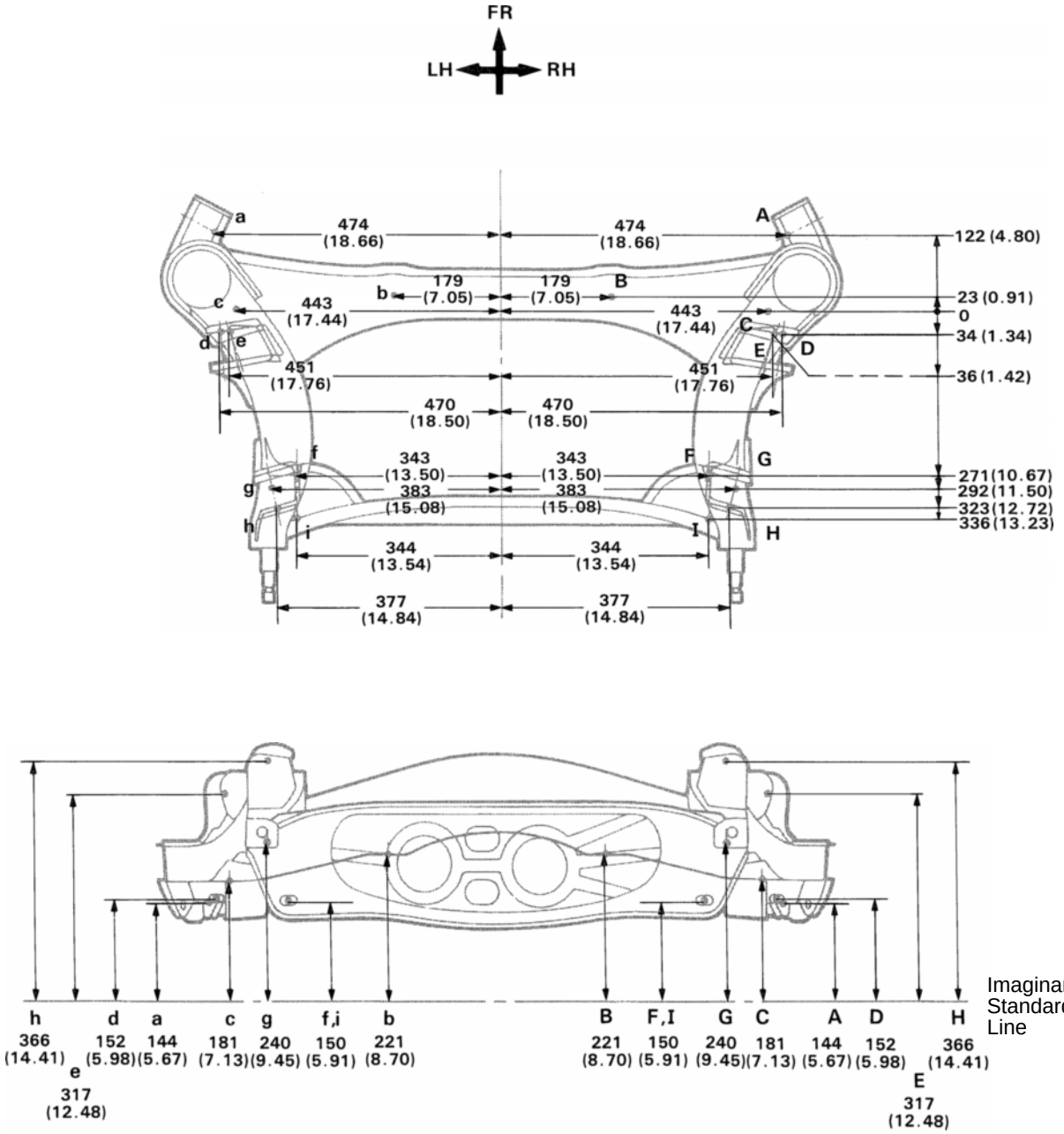

NO8909
NO8909

mm (in.)

Symbol	Name	Hole dia.	Symbol	Name	Hole dia.
A, a	Strut rod installation hole–inner	14.2 (0.559)	F, f	No. 2 lower arm installation hole–front	26×14.2 (1.02×0.559)
B, b	Differential carrier installation nut	12 (0.47) nut	G, g	Rear suspension member standard hole	20 (0.79)
C, c	Rear suspension member standard hole	20 (0.79)	H, h	Upper arm installation hole–rear	14.2 (0.559)
D, d	No. 1 lower arm installation hole–front	26×14.2 (1.02×0.559)	I, i	No. 2 lower arm installation hole–rear	26×14.2 (1.02×0.559)
E, e	Upper arm installation hole–front	14.2 (0.559)	—	—	—